Surface Mount XClampR® Transient Voltage Suppressors

High Temperature Stability and High Reliability Conditions

SMC (DO-214AB)

PRIMARY CHARACTERISTICS	
V_{WM}	24 V
V_{BR}	26.7 V to 29.5 V
V_{CL} max.	24 V
P_{PPM} (10/1000 µs)	7000 W [1]
T_J max.	175 °C
Polarity	Bidirectional
Package	SMC (DO-214AB)

Note

[1] Equivalent I_{PPM} with conventional 7 KW TVS

TYPICAL APPLICATIONS

Use in sensitive electronics protection against voltage transients induced by inductive load switch and lightning on ICs, MOSFET, signal lines of sensor units for consumer, computer, industrial, automotive, and telecommunication. May need to connect in series with one conventional TVS to address in applications for various stand-off voltages and clamping voltages.

FEATURES

- XClampR® extremely low clamping voltage
- I_{PPM} = 180 A with a 10/1000 µs waveform
- T_J = 175 °C capability suitable for high reliability and automotive requirement
- Bidirectional
- Low leakage current
- AEC-Q101 qualified
  - Automotive ordering code: base P/NHM3
- Meets MSL level 1, per J-STD-020, LF maximum peak of 260 °C
- UL recognition for safety 497B with file number E136766
- Material categorization: for definitions of compliance please see www.vishay.com/doc?99912

RoHS COMPLIANT
HALOGEN FREE

MECHANICAL DATA

Case: SMC (DO-214AB)

Molding compound meets UL 94 V-0 flammability rating

Base P/N-M3 - halogen-free, RoHS-compliant, and industrial grade

Base P/NHM3 - halogen-free, RoHS-compliant, and AEC-Q101 qualified

Terminals: matte tin plated leads, solderable per J-STD-002 and JESD 22-B102

M3 and HM3 suffix meet JESD 201 class 2 whisker test

Polarity: no marking on bidirectional types

MAXIMUM RATINGS (T_A = 25 °C unless otherwise noted)

PARAMETER	SYMBOL	VALUE	UNIT
Peak pulse current with a 10/1000 µs waveform, fig.1	I_{PPM} [1]	180	A
Maximum working stand-off voltage	V_{WM}	24	V
Operating junction and storage temperature range	T_J, T_{STG}	-55 to +175	°C

Note

[1] Non-repetitive current pulse and derated above T_A = 25 °C

ELECTRICAL CHARACTERISTICS (T_A = 25 °C unless otherwise noted)

DEVICE TYPE	DEVICE MARKING CODE	BREAKDOWN VOLTAGE V_{BR} (V) AT I_T		TEST CURRENT I_T (mA)	STAND-OFF VOLTAGE V_{WM} (V)
		MIN.	MAX.		
XMC7K24CA	C7BZ	26.7	29.5	1.0	24

ADDITIONAL CHARACTERISTICS (T_A = 25 °C unless otherwise noted)

PARAMETER	TEST CONDITIONS		SYMBOL	MIN.	TYP.	MAX.	UNIT
Clamping voltage for 10/1000 µs exponentially decaying waveform	at I_{PP} = 180 A		V_{CL}	18	-	24	V
Reverse leakage current	Rated V_{WM}	T_J = 25 °C	I_R	-	-	1.0	µA

For technical questions within your region: DiodesAmericas@vishay.com, DiodesAsia@vishay.com, DiodesEurope@vishay.com
THIS DOCUMENT IS SUBJECT TO CHANGE WITHOUT NOTICE. THE PRODUCTS DESCRIBED HEREIN AND THIS DOCUMENT ARE SUBJECT TO SPECIFIC DISCLAIMERS, SET FORTH AT www.vishay.com/doc?91000

ORDERING INFORMATION (Example)				
PREFERRED P/N	**UNIT WEIGHT (g)**	**PREFERRED PACKAGE CODE**	**BASE QUANTITY**	**DELIVERY MODE**
XMC7K24CA-M3/H	0.261	H	850	7" diameter plastic tape and reel
XMC7K24CA-M3/I	0.261	I	3500	13" diameter plastic tape and reel
XMC7K24CAHM3/H [1]	0.261	H	850	7" diameter plastic tape and reel
XMC7K24CAHM3/I[1]	0.261	I	3500	13" diameter plastic tape and reel

Note

[1] AEC-Q101 qualified

I - V CURVE CHARACTERISTICS

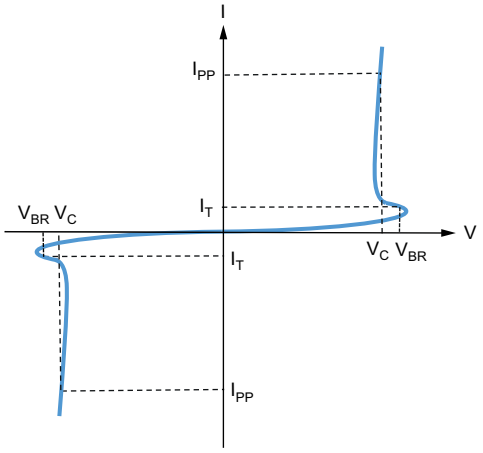

V_{BR}.....Breakdown voltage
I_T.....Reverse test current
V_C.....Clamping voltage
I_{PP}.....Peak pulse surge current

For technical questions within your region: DiodesAmericas@vishay.com, DiodesAsia@vishay.com, DiodesEurope@vishay.com
THIS DOCUMENT IS SUBJECT TO CHANGE WITHOUT NOTICE. THE PRODUCTS DESCRIBED HEREIN AND THIS DOCUMENT ARE SUBJECT TO SPECIFIC DISCLAIMERS, SET FORTH AT www.vishay.com/doc?91000

RATINGS AND CHARACTERISTICS CURVES (T_A = 25 °C unless otherwise noted)

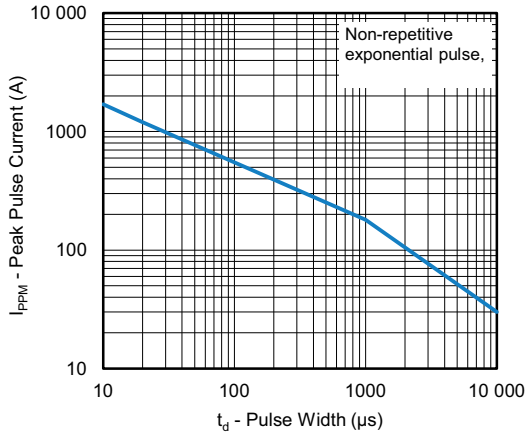

Fig. 1 - Peak Pulse Current Rating Curve

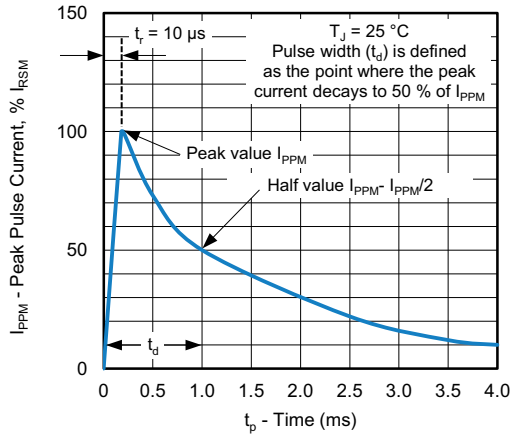

Fig. 3 - Pulse Waveform

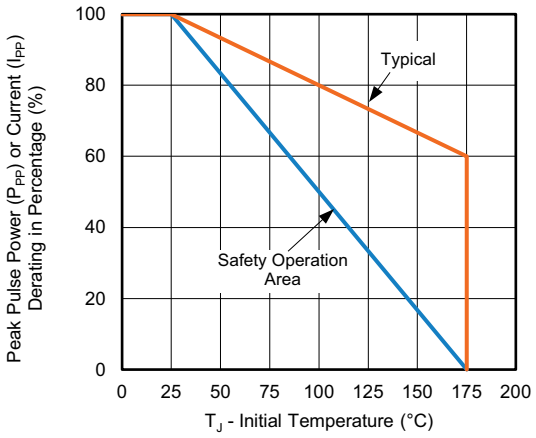

Fig. 2 - Peak Pulse Current vs. Initial Junction Temperature

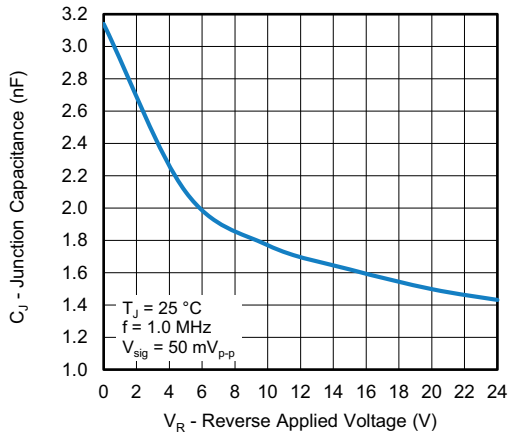

Fig. 4 - Typical Junction Capacitance

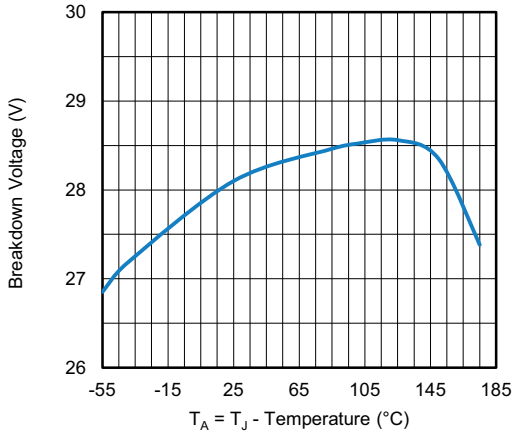

Fig. 5 - Typical Breakdown Voltage vs. Temperature Curve

For technical questions within your region: DiodesAmericas@vishay.com, DiodesAsia@vishay.com, DiodesEurope@vishay.com
THIS DOCUMENT IS SUBJECT TO CHANGE WITHOUT NOTICE. THE PRODUCTS DESCRIBED HEREIN AND THIS DOCUMENT ARE SUBJECT TO SPECIFIC DISCLAIMERS, SET FORTH AT www.vishay.com/doc?91000

PACKAGE OUTLINE DIMENSIONS in inches (millimeters)

SMC (DO-214AB)

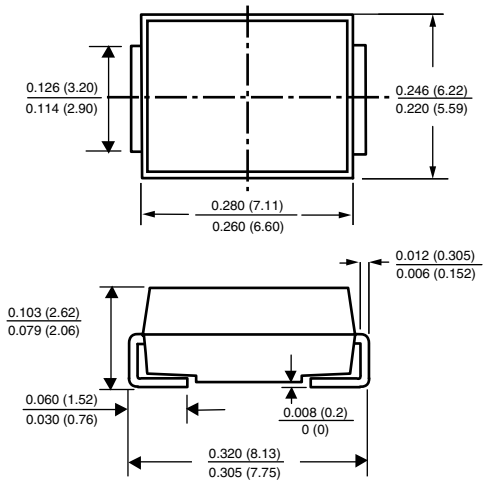

Mounting Pad Layout

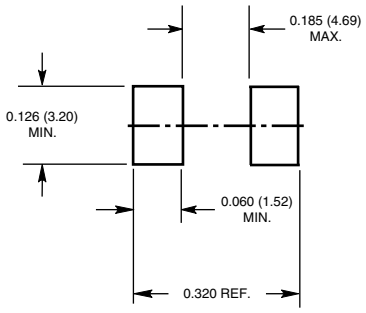

For technical questions within your region: DiodesAmericas@vishay.com, DiodesAsia@vishay.com, DiodesEurope@vishay.com
THIS DOCUMENT IS SUBJECT TO CHANGE WITHOUT NOTICE. THE PRODUCTS DESCRIBED HEREIN AND THIS DOCUMENT ARE SUBJECT TO SPECIFIC DISCLAIMERS, SET FORTH AT www.vishay.com/doc?91000

Disclaimer

ALL PRODUCT, PRODUCT SPECIFICATIONS AND DATA ARE SUBJECT TO CHANGE WITHOUT NOTICE TO IMPROVE RELIABILITY, FUNCTION OR DESIGN OR OTHERWISE.

Vishay Intertechnology, Inc., its affiliates, agents, and employees, and all persons acting on its or their behalf (collectively, “Vishay”), disclaim any and all liability for any errors, inaccuracies or incompleteness contained in any datasheet or in any other disclosure relating to any product.

Vishay makes no warranty, representation or guarantee regarding the suitability of the products for any particular purpose or the continuing production of any product. To the maximum extent permitted by applicable law, Vishay disclaims (i) any and all liability arising out of the application or use of any product, (ii) any and all liability, including without limitation special, consequential or incidental damages, and (iii) any and all implied warranties, including warranties of fitness for particular purpose, non-infringement and merchantability.

Statements regarding the suitability of products for certain types of applications are based on Vishay's knowledge of typical requirements that are often placed on Vishay products in generic applications. Such statements are not binding statements about the suitability of products for a particular application. It is the customer's responsibility to validate that a particular product with the properties described in the product specification is suitable for use in a particular application. Parameters provided in datasheets and / or specifications may vary in different applications and performance may vary over time. All operating parameters, including typical parameters, must be validated for each customer application by the customer's technical experts. Product specifications do not expand or otherwise modify Vishay's terms and conditions of purchase, including but not limited to the warranty expressed therein.

Hyperlinks included in this datasheet may direct users to third-party websites. These links are provided as a convenience and for informational purposes only. Inclusion of these hyperlinks does not constitute an endorsement or an approval by Vishay of any of the products, services or opinions of the corporation, organization or individual associated with the third-party website. Vishay disclaims any and all liability and bears no responsibility for the accuracy, legality or content of the third-party website or for that of subsequent links.

Vishay products are not designed for use in life-saving or life-sustaining applications or any application in which the failure of the Vishay product could result in personal injury or death unless specifically qualified in writing by Vishay. Customers using or selling Vishay products not expressly indicated for use in such applications do so at their own risk. Please contact authorized Vishay personnel to obtain written terms and conditions regarding products designed for such applications.

No license, express or implied, by estoppel or otherwise, to any intellectual property rights is granted by this document or by any conduct of Vishay. Product names and markings noted herein may be trademarks of their respective owners.

© 2026 VISHAY INTERTECHNOLOGY, INC. ALL RIGHTS RESERVED

THIS DOCUMENT IS SUBJECT TO CHANGE WITHOUT NOTICE. THE PRODUCTS DESCRIBED HEREIN AND THIS DOCUMENT ARE SUBJECT TO SPECIFIC DISCLAIMERS, SET FORTH AT www.vishay.com/doc?91000