High Speed Infrared Emitting Diodes, 890 nm, Surface Emitter Technology

VSMY2890RGX01

VSMY2890GX01

LINKS TO ADDITIONAL RESOURCES

Infographics

DESCRIPTION

As part of the SurfLight™ portfolio, the VSMY2890 series are infrared, 890 nm emitting diodes based on GaAlAs surface emitter chip technology with extreme high radiant intensities, high optical power and high speed, molded in clear, untinted plastic packages (with lens) for surface mounting (SMD).

FEATURES

- Package type: surface-mount
- Package form: GW, RGW
- Dimensions (L x W x H in mm): 2.3 x 2.3 x 2.8
- AEC-Q101 qualified
- Peak wavelength: λ_p = 890 nm
- Angle of half intensity: φ = ± 10°
- Suitable for high pulse current operation
- Terminal configurations: gullwing or reverse gullwing
- Package matches with detector VEMD2500X01 series
- Floor life: 4 weeks, MSL 2a, according to J-STD-020
- Material categorization: for definitions of compliance please see www.vishay.com/doc?99912

AUTOMOTIVE GRADE

Pb-free

e3

RoHS COMPLIANT

HALOGEN FREE

GREEN (5-2008)

APPLICATIONS

- Automotive sensors
- Photointerrupters
- Emitter source for proximity sensors
- IR illumination
- Head-up displays

PRODUCT SUMMARY

COMPONENT	I_e (mW/sr) at I_F = 100 mA	φ (°)	λ_P (nm)	t_r (ns)
VSMY2890RGX01	135	± 10	890	15
VSMY2890GX01	135	± 10	890	15

Note

- Test conditions see table “Basic Characteristics“

ORDERING INFORMATION

ORDERING CODE	PACKAGING	REMARKS	PACKAGE FORM
VSMY2890RGX01	Tape and reel	MOQ: 6000 pcs, 6000 pcs/reel	Reverse gullwing
VSMY2890GX01	Tape and reel	MOQ: 6000 pcs, 6000 pcs/reel	Gullwing

Note

- MOQ: minimum order quantity

For technical questions, contact: SensorsTechSupport@vishay.com
THIS DOCUMENT IS SUBJECT TO CHANGE WITHOUT NOTICE. THE PRODUCTS DESCRIBED HEREIN AND THIS DOCUMENT ARE SUBJECT TO SPECIFIC DISCLAIMERS, SET FORTH AT www.vishay.com/doc?91000

ABSOLUTE MAXIMUM RATINGS (T_{amb} = 25 °C, unless otherwise specified)				
PARAMETER	**TEST CONDITION**	**SYMBOL**	**VALUE**	**UNIT**
Forward current		I_F	100	mA
Peak forward current	$t_p/T = 0.5$, $t_p = 100$ µs	I_{FM}	200	mA
Surge forward current	$t_p = 100$ µs	I_{FSM}	1	A
Power dissipation		P_V	190	mW
Junction temperature		T_j	100	°C
Operating temperature range		T_{amb}	-40 to +85	°C
Storage temperature range		T_{stg}	-40 to +100	°C
Soldering temperature	According to Fig. 9, J-STD-020	T_{sd}	260	°C
Thermal resistance junction-to-ambient	JESD51	R_{thJA}	250	K/W

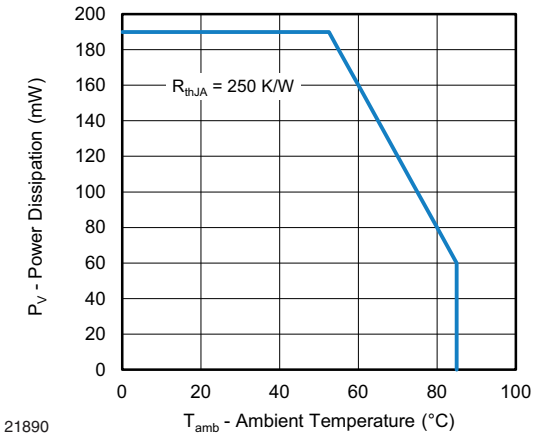

Fig. 1 - Power Dissipation Limit vs. Ambient Temperature

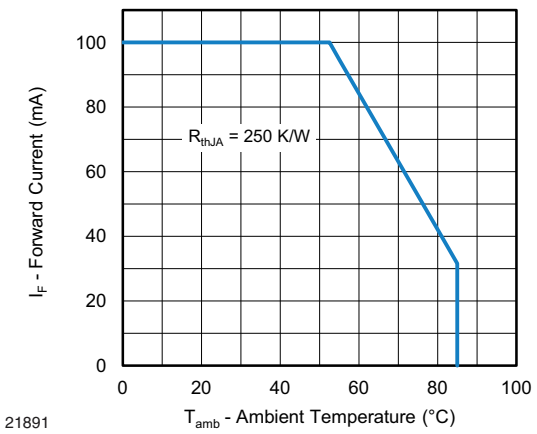

Fig. 2 - Forward Current Limit vs. Ambient Temperature

BASIC CHARACTERISTICS (T_{amb} = 25 °C, unless otherwise specified)						
PARAMETER	**TEST CONDITION**	**SYMBOL**	**MIN.**	**TYP.**	**MAX.**	**UNIT**
Forward voltage	$I_F = 100$ mA, $t_p = 20$ ms	V_F	-	1.7	1.9	V
	$I_F = 1$ A, $t_p = 100$ µs	V_F	-	2.8	-	V
Temperature coefficient of V_F	$I_F = 100$ mA	TK_{VF}	-	-2.0	-	mV/K
Reverse current		I_R	Not designed for reverse operation			µA
Junction capacitance	$V_R = 0$ V, f = 1 MHz, E = 0 mW/cm^2	C_J	-	60	-	pF
Radiant intensity	$I_F = 100$ mA, $t_p = 20$ ms	I_e	50	135	175	mW/sr
	$I_F = 1$ A, $t_p = 100$ µs	I_e	-	1000	-	mW/sr
Radiant power	$I_F = 100$ mA, $t_p = 20$ ms	ϕ_e	-	55	-	mW
Temperature coefficient of radiant power	$I_F = 100$ mA	$TK\phi_e$	-	-0.12	-	%/K
Angle of half intensity		φ	-	± 10	-	°
Peak wavelength	$I_F = 100$ mA	λ_p	870	890	910	nm
Spectral bandwidth	$I_F = 100$ mA	$\Delta\lambda$	-	35	-	nm
Temperature coefficient of λ_p	$I_F = 100$ mA	$TK\lambda_p$	-	0.3	-	nm/K
Rise time	$I_F = 100$ mA, 10 % to 90 %	t_r	-	15	-	ns
Fall time	$I_F = 100$ mA, 10 % to 90 %	t_f	-	15	-	ns

THIS DOCUMENT IS SUBJECT TO CHANGE WITHOUT NOTICE. THE PRODUCTS DESCRIBED HEREIN AND THIS DOCUMENT ARE SUBJECT TO SPECIFIC DISCLAIMERS, SET FORTH AT www.vishay.com/doc?91000

BASIC CHARACTERISTICS (T_{amb} = 25 °C, unless otherwise specified)

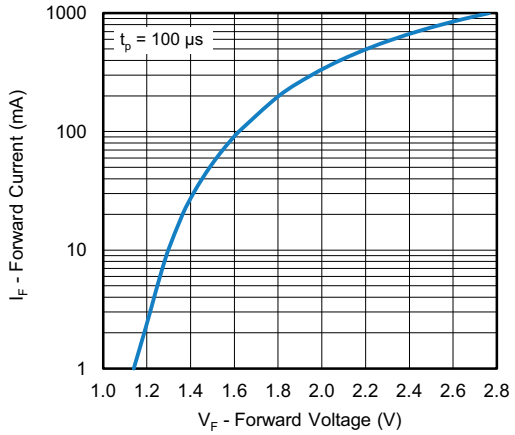

Fig. 3 - Forward Current vs. Forward Voltage

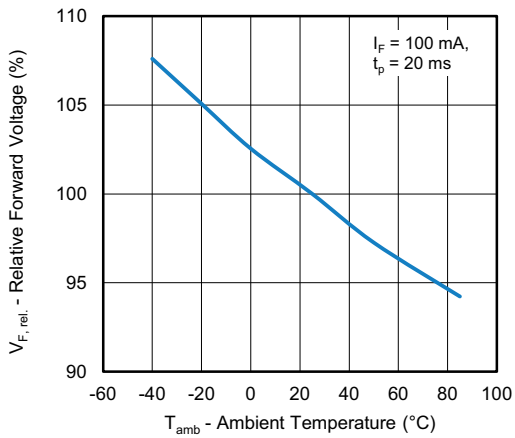

Fig. 4 - Relative Forward Voltage vs. Ambient Temperature

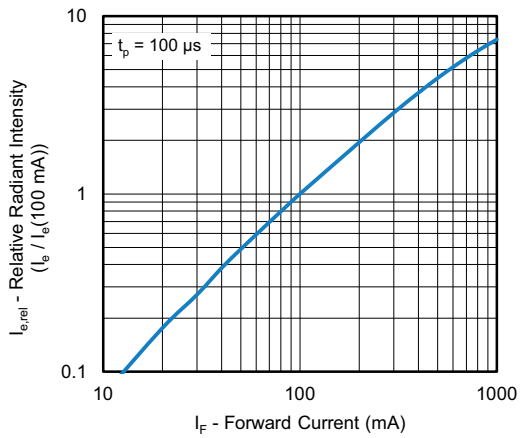

Fig. 5 - Relative Radiant Intensity vs. Forward Current

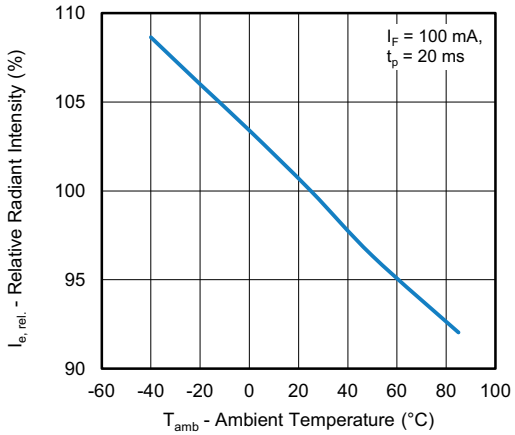

Fig. 6 - Relative Radiant Intensity vs. Ambient Temperature

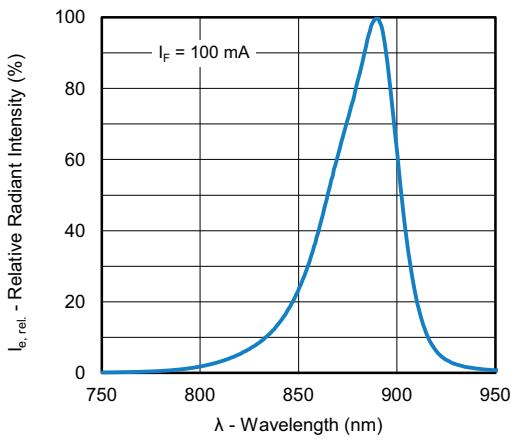

Fig. 7 - Relative Radiant Intensity vs. Wavelength

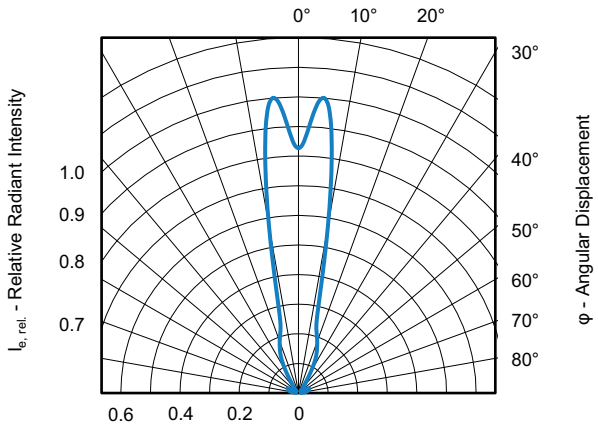

Fig. 8 - Relative Radiant Intensity vs. Angular Displacement

For technical questions, contact: SensorsTechSupport@vishay.com
THIS DOCUMENT IS SUBJECT TO CHANGE WITHOUT NOTICE. THE PRODUCTS DESCRIBED HEREIN AND THIS DOCUMENT ARE SUBJECT TO SPECIFIC DISCLAIMERS, SET FORTH AT www.vishay.com/doc?91000

SOLDER PROFILE

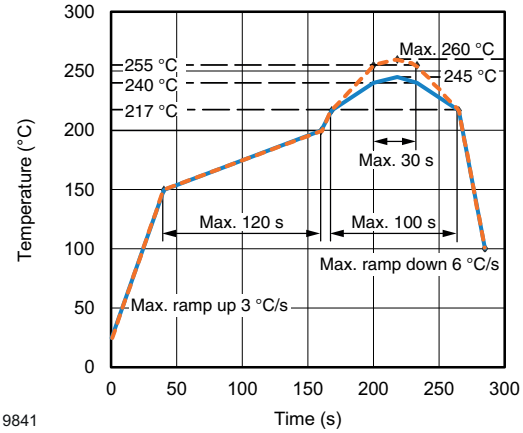

Fig. 9 - Lead (Pb)-free Reflow Solder Profile According to J-STD-020

DRYPACK

Devices are packed in moisture barrier bags (MBB) to prevent the products from moisture absorption during transportation and storage. Each bag contains a desiccant.

FLOOR LIFE

Floor life (time between soldering and removing from MBB) must not exceed the time indicated on MBB label:

Floor life: 4 weeks

Conditions: T_{amb} < 30 °C, RH < 60 %

Moisture sensitivity level 2a, according to J-STD-020.

DRYING

In case of moisture absorption devices should be baked before soldering. Conditions see J-STD-033D or label. Devices taped on reel dry using recommended conditions 192 h at 40 °C (+ 5 °C), RH < 5 %.

For technical questions, contact: SensorsTechSupport@vishay.com
THIS DOCUMENT IS SUBJECT TO CHANGE WITHOUT NOTICE. THE PRODUCTS DESCRIBED HEREIN AND THIS DOCUMENT ARE SUBJECT TO SPECIFIC DISCLAIMERS, SET FORTH AT www.vishay.com/doc?91000

PACKAGE DIMENSIONS in millimeters: **VSMY2890RGX01**

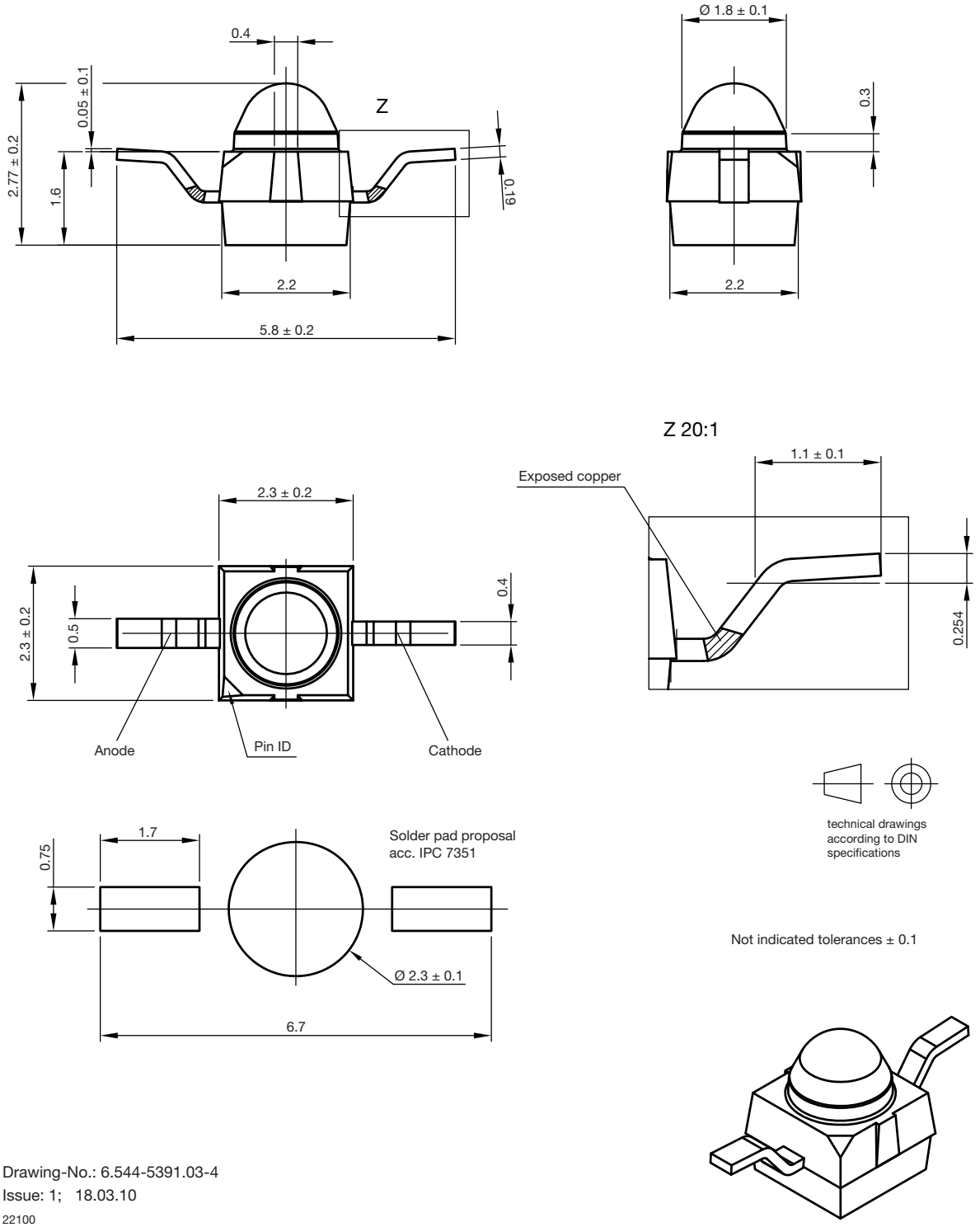

Drawing-No.: 6.544-5391.03-4
Issue: 1; 18.03.10
22100

For technical questions, contact: SensorsTechSupport@vishay.com
THIS DOCUMENT IS SUBJECT TO CHANGE WITHOUT NOTICE. THE PRODUCTS DESCRIBED HEREIN AND THIS DOCUMENT ARE SUBJECT TO SPECIFIC DISCLAIMERS, SET FORTH AT www.vishay.com/doc?91000

PACKAGE DIMENSIONS in millimeters: **VSMY2890GX01**

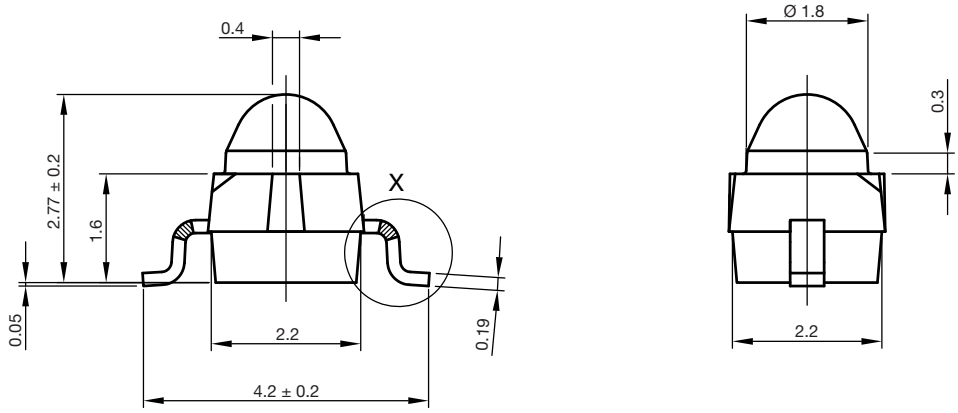

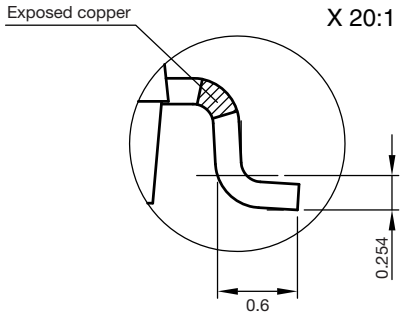

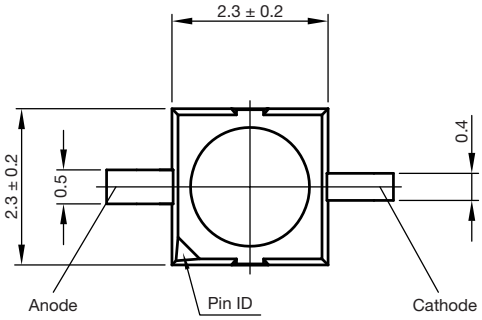

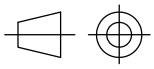

technical drawings according to DIN specifications

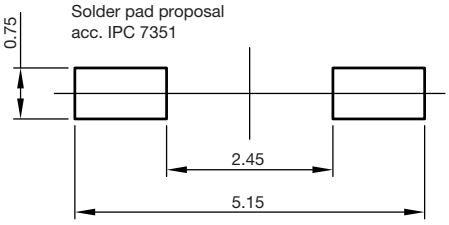

Not indicated tolerances ± 0.1

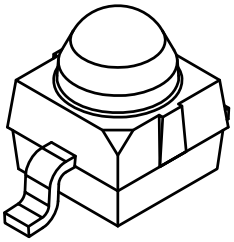

Drawing-No.: 6.544-5383.03-4
Issue: 1; 18.03.10
22099

For technical questions, contact: SensorsTechSupport@vishay.com
THIS DOCUMENT IS SUBJECT TO CHANGE WITHOUT NOTICE. THE PRODUCTS DESCRIBED HEREIN AND THIS DOCUMENT ARE SUBJECT TO SPECIFIC DISCLAIMERS, SET FORTH AT www.vishay.com/doc?91000

TAPING AND REEL DIMENSIONS in millimeters: **VSMY2890RGX01**

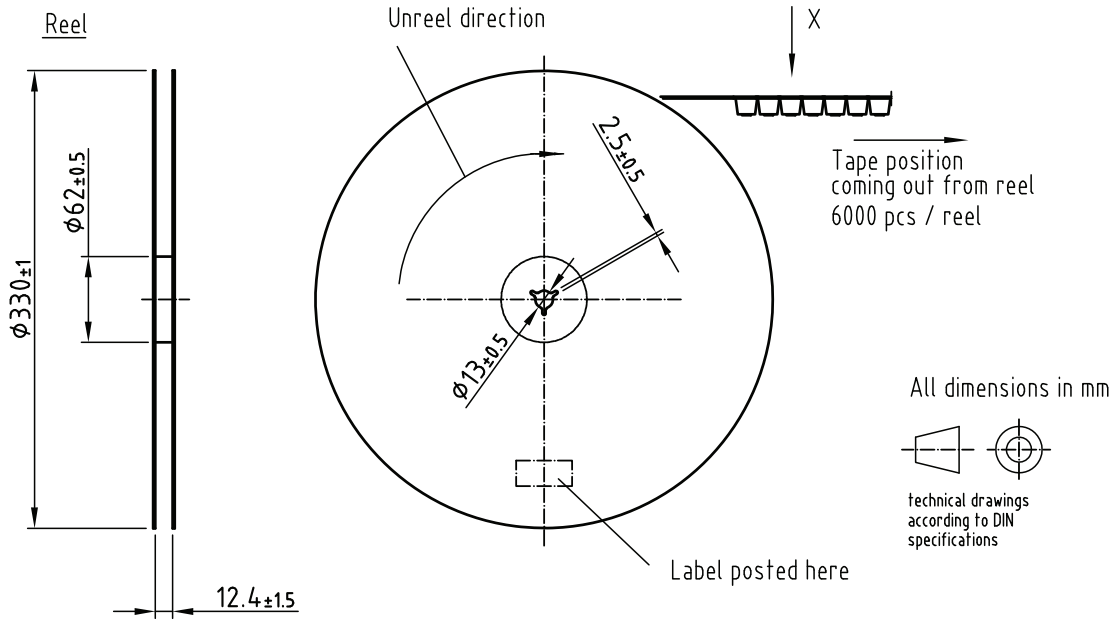

Leader and trailer tape:

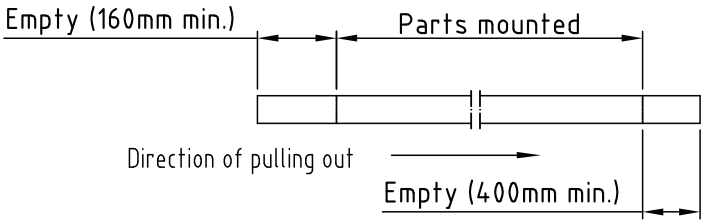

Terminal position in tape

Device	Lead I	Lead II
VEMT 2000	Collector	Emitter
VEMT 2500		
VEMD 2000	Cathode	Anode
VEMD 2500		
VSMB 2000		
VSMG 2000		
VSMF 2890 RG		
VSMB 294008 RG		
VSMY 2xxx	Anode	Cathode
VSMF 288011 RG		

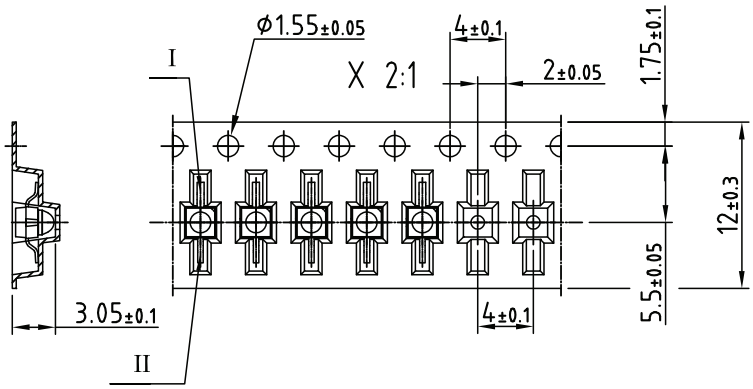

Drawing refers to following types: see table
Reel dimensions and tape

Drawing-No.: 9.800-5100.01-4
Issue: preliminary, 11.07.19

For technical questions, contact: SensorsTechSupport@vishay.com
THIS DOCUMENT IS SUBJECT TO CHANGE WITHOUT NOTICE. THE PRODUCTS DESCRIBED HEREIN AND THIS DOCUMENT ARE SUBJECT TO SPECIFIC DISCLAIMERS, SET FORTH AT www.vishay.com/doc?91000

TAPING AND REEL DIMENSIONS in millimeters: **VSMY2890GX01**

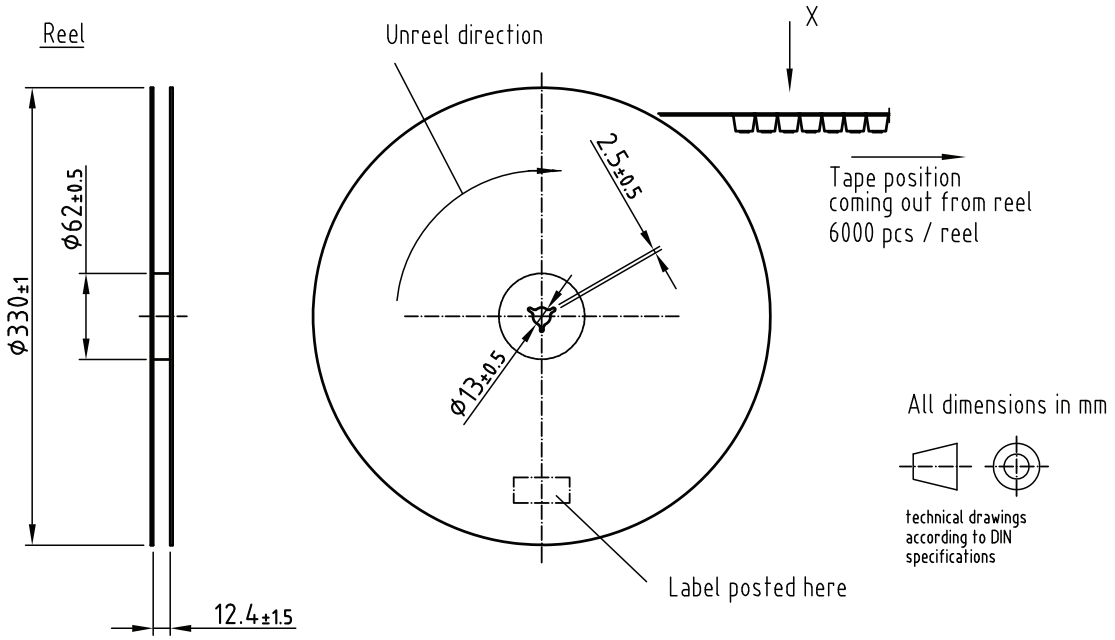

Leader and trailer tape:

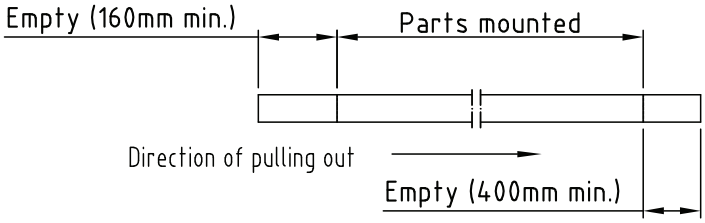

Terminal position in tape

Device	Lead I	Lead II
VSMB 2020	Cathode	Anode
VSMG 2020		
VEMD 2020		
VEMD 2520		
VSMF 2890 G		
VSMB 294008 G		
VEMT 2020	Collector	Emitter
VEMT 2520		
VSMY 2xxx	Anode	Cathode
VSMF 288011 G		

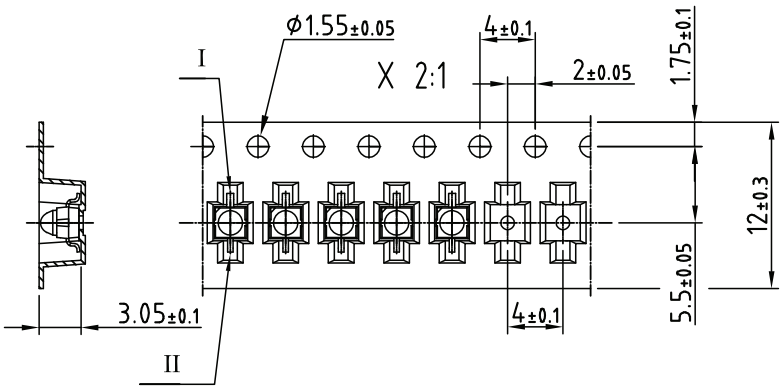

Drawing refers to following types: see table
Reel dimensions and tape

Drawing-No.: 9.800-5091.01-4
Issue: preliminary, 11.07.19

For technical questions, contact: SensorsTechSupport@vishay.com
THIS DOCUMENT IS SUBJECT TO CHANGE WITHOUT NOTICE. THE PRODUCTS DESCRIBED HEREIN AND THIS DOCUMENT ARE SUBJECT TO SPECIFIC DISCLAIMERS, SET FORTH AT www.vishay.com/doc?91000

Disclaimer

ALL PRODUCT, PRODUCT SPECIFICATIONS AND DATA ARE SUBJECT TO CHANGE WITHOUT NOTICE TO IMPROVE RELIABILITY, FUNCTION OR DESIGN OR OTHERWISE.

Vishay Intertechnology, Inc., its affiliates, agents, and employees, and all persons acting on its or their behalf (collectively, “Vishay”), disclaim any and all liability for any errors, inaccuracies or incompleteness contained in any datasheet or in any other disclosure relating to any product.

Vishay makes no warranty, representation or guarantee regarding the suitability of the products for any particular purpose or the continuing production of any product. To the maximum extent permitted by applicable law, Vishay disclaims (i) any and all liability arising out of the application or use of any product, (ii) any and all liability, including without limitation special, consequential or incidental damages, and (iii) any and all implied warranties, including warranties of fitness for particular purpose, non-infringement and merchantability.

Statements regarding the suitability of products for certain types of applications are based on Vishay's knowledge of typical requirements that are often placed on Vishay products in generic applications. Such statements are not binding statements about the suitability of products for a particular application. It is the customer's responsibility to validate that a particular product with the properties described in the product specification is suitable for use in a particular application. Parameters provided in datasheets and / or specifications may vary in different applications and performance may vary over time. All operating parameters, including typical parameters, must be validated for each customer application by the customer's technical experts. Product specifications do not expand or otherwise modify Vishay's terms and conditions of purchase, including but not limited to the warranty expressed therein.

Hyperlinks included in this datasheet may direct users to third-party websites. These links are provided as a convenience and for informational purposes only. Inclusion of these hyperlinks does not constitute an endorsement or an approval by Vishay of any of the products, services or opinions of the corporation, organization or individual associated with the third-party website. Vishay disclaims any and all liability and bears no responsibility for the accuracy, legality or content of the third-party website or for that of subsequent links.

Vishay products are not designed for use in life-saving or life-sustaining applications or any application in which the failure of the Vishay product could result in personal injury or death unless specifically qualified in writing by Vishay. Customers using or selling Vishay products not expressly indicated for use in such applications do so at their own risk. Please contact authorized Vishay personnel to obtain written terms and conditions regarding products designed for such applications.

No license, express or implied, by estoppel or otherwise, to any intellectual property rights is granted by this document or by any conduct of Vishay. Product names and markings noted herein may be trademarks of their respective owners.

© 2026 VISHAY INTERTECHNOLOGY, INC. ALL RIGHTS RESERVED

THIS DOCUMENT IS SUBJECT TO CHANGE WITHOUT NOTICE. THE PRODUCTS DESCRIBED HEREIN AND THIS DOCUMENT ARE SUBJECT TO SPECIFIC DISCLAIMERS, SET FORTH AT www.vishay.com/doc?91000