Ambient Light Sensor

LINKS TO ADDITIONAL RESOURCES

3D Models | Footprints | Infographics

DESCRIPTION

VEMD4200FX01 is a high speed and high sensitive PIN photodiode. It is a miniature surface-mount device (SMD) with a 0.42 mm^2 sensitive area. The spectral sensitivity is matched to the human eye.

FEATURES

- Package type: surface-mount
- Package form: 0805
- Dimensions (L x W x H in mm): 2 x 1.25 x 0.7
- Radiant sensitive area (in mm^2): 0.42
- Ambient temperature range: T_{amb} = -40 °C to +110 °C
- Adapted to human eye sensitivity
- Angle of half sensitivity: φ = ± 55°
- Floor life: 168 h, MSL 3, according to J-STD-020
- Lead (Pb)-free reflow soldering
- AEC-Q101 qualified
- Material categorization: for definitions of compliance please see www.vishay.com/doc?99912

AUTOMOTIVE GRADE
Pb-free
e4
RoHS COMPLIANT
HALOGEN FREE
GREEN (5-2008)

APPLICATIONS

- Backlight dimming
- Automatic light control
- Automotive sensors
- Hygienic applications

PRODUCT SUMMARY

COMPONENT	I_{ra} (µA)	φ (°)	$\lambda_{0.5}$ (nm)
VEMD4200FX01	0.07	± 55	400 to 660

Note

- Test conditions see table “Basic Characteristics”

ORDERING INFORMATION

ORDERING CODE	PACKAGING	REMARKS	PACKAGE FORM
VEMD4200FX01	Tape and reel	MOQ: 3000 pcs, 3000 pcs/reel	0805

Note

- MOQ: minimum order quantity

ABSOLUTE MAXIMUM RATINGS (T_{amb} = 25 °C, unless otherwise specified)

PARAMETER	TEST CONDITION	SYMBOL	VALUE	UNIT
Reverse voltage		V_R	20	V
Junction temperature		T_j	110	°C
Ambient temperature range		T_{amb}	-40 to +110	°C
Storage temperature range		T_{stg}	-40 to +110	°C
Soldering temperature	According to reflow solder profile Fig. 8	T_{sd}	260	°C
ESD safety HBM	± 2000 V, 1.5 kΩ, 100 pF, 3 pulses	ESD_{HBM}	≥ 2	kV

For technical questions, contact: detectortechsupport@vishay.com
THIS DOCUMENT IS SUBJECT TO CHANGE WITHOUT NOTICE. THE PRODUCTS DESCRIBED HEREIN AND THIS DOCUMENT ARE SUBJECT TO SPECIFIC DISCLAIMERS, SET FORTH AT www.vishay.com/doc?91000

BASIC CHARACTERISTICS (T_{amb} = 25 °C, unless otherwise specified)						
PARAMETER	**TEST CONDITION**	**SYMBOL**	**MIN.**	**TYP.**	**MAX.**	**UNIT**
Breakdown voltage	I_R = 100 µA, E = 0 lx	$V_{(BR)}$	20	-	-	V
Reverse dark current	V_R = 10 V, E = 0 lx	I_{ro}	-	0.1	5	nA
Diode capacitance	V_R = 0 V, f = 1 MHz, E = 0 lx	C_D	-	115	-	pF
	V_R = 5 V, f = 1 MHz, E = 0 lx	C_D	-	45	-	pF
Short circuit current	E_V = 100 lx, CIE illuminant A	I_K	-	0.07	-	µA
Reverse light current	E_v = 100 lx, CIE illuminant A, V_R = 5 V	I_{ra}	-	0.07	-	µA
	E_e = 1 mW/ cm^2, λ = 530 nm, V_R = 5 V	I_{ra}	0.95	1.35	1.85	µA
Angle of half sensitivity		φ	-	± 55	-	°
Wavelength of peak sensitivity		λ_p	-	540	-	nm
Range of spectral bandwidth		$\lambda_{0.5}$	-	400 to 660	-	nm
Rise time	V_R = 10 V, R_L = 50 Ω, λ = 525 nm	t_r	-	100	-	ns
Fall time	V_R = 10 V, R_L = 50 Ω, λ = 525 nm	t_f	-	100	-	ns

BASIC CHARACTERISTICS (T_{amb} = 25 °C, unless otherwise specified)

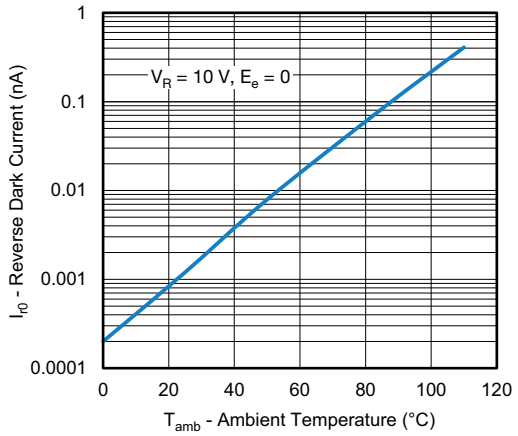

Fig. 1 - Reverse Dark Current vs. Ambient Temperature

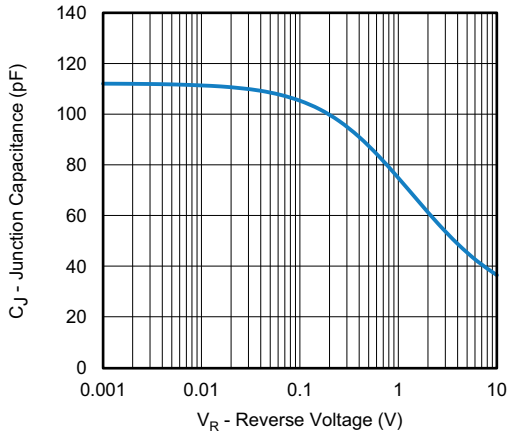

Fig. 2 - Diode Capacitance vs. Reverse Voltage

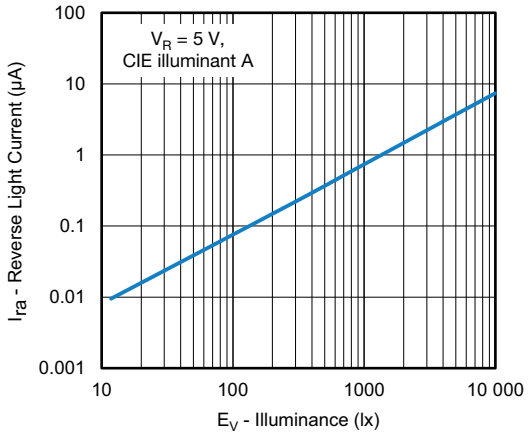

Fig. 3 - Reverse Light Current vs. Irradiance

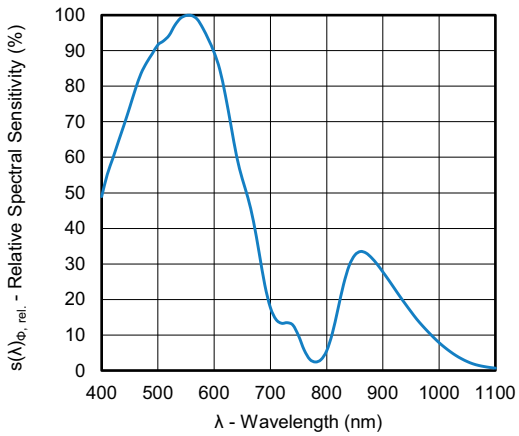

Fig. 4 - Relative Spectral Sensitivity vs. Wavelength

For technical questions, contact: detectortechsupport@vishay.com
THIS DOCUMENT IS SUBJECT TO CHANGE WITHOUT NOTICE. THE PRODUCTS DESCRIBED HEREIN AND THIS DOCUMENT ARE SUBJECT TO SPECIFIC DISCLAIMERS, SET FORTH AT www.vishay.com/doc?91000

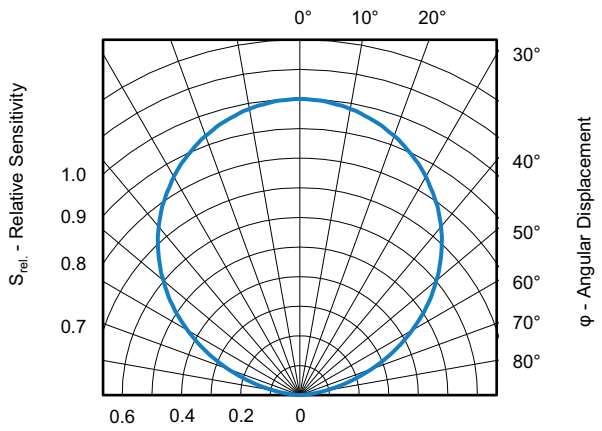

Fig. 5 - Relative Radiant Sensitivity vs. Angular Displacement

REFLOW SOLDER PROFILE

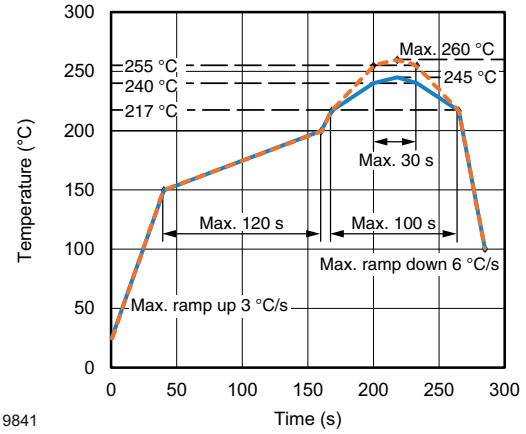

Fig. 6 - Lead (Pb)-free Reflow Solder Profile According to J-STD-020

DRYPACK

Devices are packed in moisture barrier bags (MBB) to prevent the products from moisture absorption during transportation and storage. Each bag contains a desiccant.

FLOOR LIFE

Floor life (time between soldering and removing from MBB) must not exceed the time indicated on MBB label:

Floor life: 168 h

Conditions: T_{amb} < 30 °C, RH < 60 %

Moisture sensitivity level 3, according to J-STD-020.

DRYING

In case of moisture absorption devices should be baked before soldering. Conditions see J-STD-020 or label. Devices taped on reel dry using recommended conditions 192 h at 40 °C (+ 5 °C), RH < 5 %.

For technical questions, contact: detectortechsupport@vishay.com
THIS DOCUMENT IS SUBJECT TO CHANGE WITHOUT NOTICE. THE PRODUCTS DESCRIBED HEREIN AND THIS DOCUMENT ARE SUBJECT TO SPECIFIC DISCLAIMERS, SET FORTH AT www.vishay.com/doc?91000

PACKAGE DIMENSIONS in millimeters

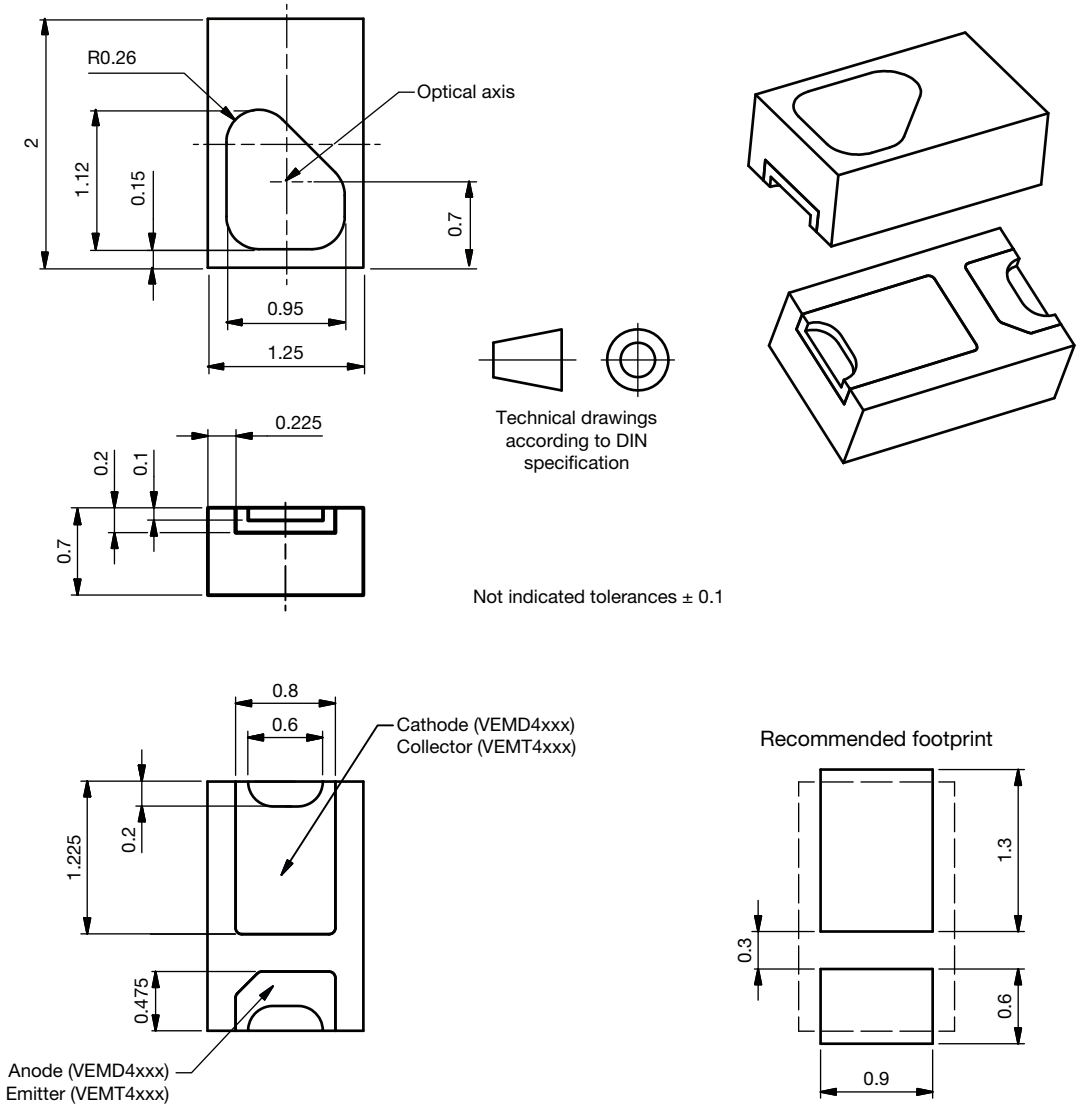

Drawing-No.: 6.550-5363.01-4
Issue: 2; 01.07.2020

For technical questions, contact: detectortechsupport@vishay.com
THIS DOCUMENT IS SUBJECT TO CHANGE WITHOUT NOTICE. THE PRODUCTS DESCRIBED HEREIN AND THIS DOCUMENT ARE SUBJECT TO SPECIFIC DISCLAIMERS, SET FORTH AT www.vishay.com/doc?91000

BLISTER TAPE DIMENSIONS in millimeters

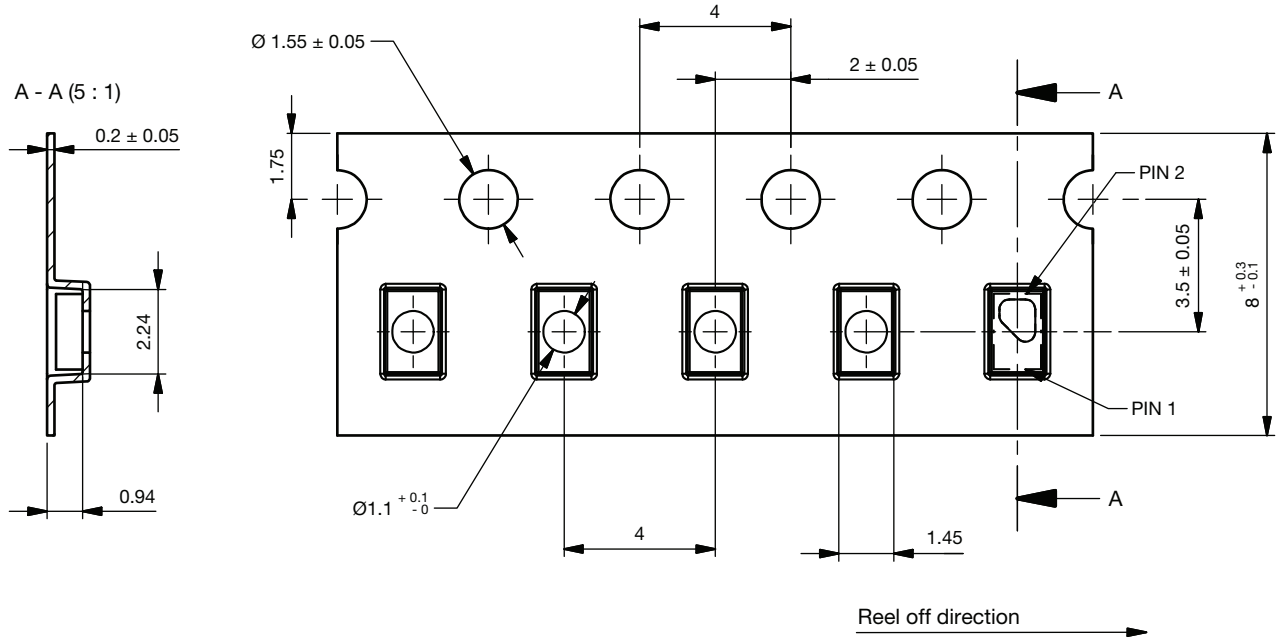

TYPE	PIN 1	PIN 2
VEMD4xxx	Anode	Cathode

Drawing-No.: 9.700-5411.0-4
Issue: 1_A; 11.10.2022

For technical questions, contact: detectortechsupport@vishay.com
THIS DOCUMENT IS SUBJECT TO CHANGE WITHOUT NOTICE. THE PRODUCTS DESCRIBED HEREIN AND THIS DOCUMENT ARE SUBJECT TO SPECIFIC DISCLAIMERS, SET FORTH AT www.vishay.com/doc?91000

REEL DIMENSIONS in millimeters

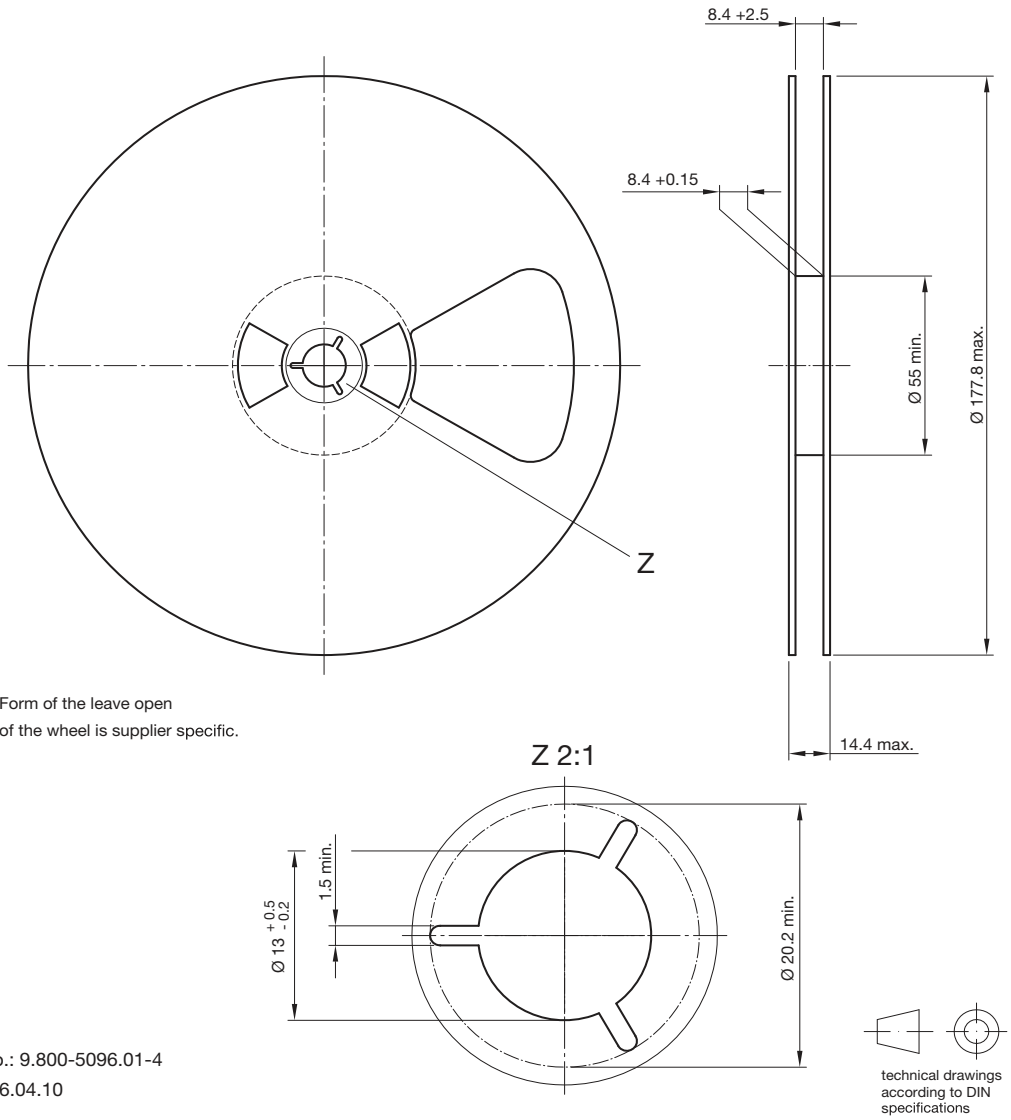

Form of the leave open
of the wheel is supplier specific.

Drawing-No.: 9.800-5096.01-4
Issue: 2; 26.04.10
20875

For technical questions, contact: detectortechsupport@vishay.com
THIS DOCUMENT IS SUBJECT TO CHANGE WITHOUT NOTICE. THE PRODUCTS DESCRIBED HEREIN AND THIS DOCUMENT ARE SUBJECT TO SPECIFIC DISCLAIMERS, SET FORTH AT www.vishay.com/doc?91000

Disclaimer

ALL PRODUCT, PRODUCT SPECIFICATIONS AND DATA ARE SUBJECT TO CHANGE WITHOUT NOTICE TO IMPROVE RELIABILITY, FUNCTION OR DESIGN OR OTHERWISE.

Vishay Intertechnology, Inc., its affiliates, agents, and employees, and all persons acting on its or their behalf (collectively, “Vishay”), disclaim any and all liability for any errors, inaccuracies or incompleteness contained in any datasheet or in any other disclosure relating to any product.

Vishay makes no warranty, representation or guarantee regarding the suitability of the products for any particular purpose or the continuing production of any product. To the maximum extent permitted by applicable law, Vishay disclaims (i) any and all liability arising out of the application or use of any product, (ii) any and all liability, including without limitation special, consequential or incidental damages, and (iii) any and all implied warranties, including warranties of fitness for particular purpose, non-infringement and merchantability.

Statements regarding the suitability of products for certain types of applications are based on Vishay's knowledge of typical requirements that are often placed on Vishay products in generic applications. Such statements are not binding statements about the suitability of products for a particular application. It is the customer's responsibility to validate that a particular product with the properties described in the product specification is suitable for use in a particular application. Parameters provided in datasheets and / or specifications may vary in different applications and performance may vary over time. All operating parameters, including typical parameters, must be validated for each customer application by the customer's technical experts. Product specifications do not expand or otherwise modify Vishay's terms and conditions of purchase, including but not limited to the warranty expressed therein.

Hyperlinks included in this datasheet may direct users to third-party websites. These links are provided as a convenience and for informational purposes only. Inclusion of these hyperlinks does not constitute an endorsement or an approval by Vishay of any of the products, services or opinions of the corporation, organization or individual associated with the third-party website. Vishay disclaims any and all liability and bears no responsibility for the accuracy, legality or content of the third-party website or for that of subsequent links.

Vishay products are not designed for use in life-saving or life-sustaining applications or any application in which the failure of the Vishay product could result in personal injury or death unless specifically qualified in writing by Vishay. Customers using or selling Vishay products not expressly indicated for use in such applications do so at their own risk. Please contact authorized Vishay personnel to obtain written terms and conditions regarding products designed for such applications.

No license, express or implied, by estoppel or otherwise, to any intellectual property rights is granted by this document or by any conduct of Vishay. Product names and markings noted herein may be trademarks of their respective owners.

© 2026 VISHAY INTERTECHNOLOGY, INC. ALL RIGHTS RESERVED

THIS DOCUMENT IS SUBJECT TO CHANGE WITHOUT NOTICE. THE PRODUCTS DESCRIBED HEREIN AND THIS DOCUMENT ARE SUBJECT TO SPECIFIC DISCLAIMERS, SET FORTH AT www.vishay.com/doc?91000