Triple Channel Transmissive Optical Sensor With Phototransistor Outputs for “Turn and Push” Encoding

FEATURES

- Package type: surface-mount
- Detector type: phototransistor
- Dimensions (L x W x H in mm): 5.7 x 5.9 x 7.1
- AEC-Q101 qualified
- Gap (in mm): 3
- Aperture (in mm): 0.3
- Typical output current under test: I_C = 1.3 mA
- Emitter wavelength: 950 nm
- Lead (Pb)-free soldering released
- Moisture sensitivity level (MSL): 1
- Material categorization: for definitions of compliance please see www.vishay.com/doc?99912

AUTOMOTIVE GRADE

Pb-free

e4

RoHS COMPLIANT

HALOGEN FREE

GREEN (5-2008)

DESCRIPTION

The TCUT1630X01 is a compact transmissive sensor that includes an infrared emitter and three phototransistor detectors, located face-to-face in a surface-mount package. The tall dome design supports an additional transistor and additional mechanical room for vertical signal encoding.

APPLICATIONS

- Automotive optical sensors
- Accurate position sensor for encoder
- Sensor for motion, speed, and direction
- Sensor for “turn and push” encoding

PRODUCT SUMMARY

PART NUMBER	GAP WIDTH (mm)	APERTURE WIDTH (mm)	TYPICAL OUTPUT CURRENT UNDER TEST [1] (mA)	DAYLIGHT BLOCKING FILTER INTEGRATED
TCUT1630X01	3	0.3	1.3	No

Note

(1) Conditions like in table basic characteristics / coupler

ORDERING INFORMATION

ORDERING CODE	PACKAGING	VOLUME [1]	REMARKS
TCUT1630X01_A [2]	Tape and reel	MOQ: 1100 pcs, 1100 pcs/reel	Drypack, MSL 1 PCN-OPT-1311-2024

Notes

(1) MOQ: minimum order quantity

(2) TCUT1630X01_A represents the post PCN parts; for more details: PCN-OPT-1311-2024

For technical questions, contact: sensorstechsupport@vishay.com

THIS DOCUMENT IS SUBJECT TO CHANGE WITHOUT NOTICE. THE PRODUCTS DESCRIBED HEREIN AND THIS DOCUMENT ARE SUBJECT TO SPECIFIC DISCLAIMERS, SET FORTH AT www.vishay.com/doc?91000

ABSOLUTE MAXIMUM RATINGS (T_{amb} = 25 °C, unless otherwise specified)				
PARAMETER	**TEST CONDITION**	**SYMBOL**	**VALUE**	**UNIT**
COUPLER				
Junction temperature		T_j	110	°C
Ambient temperature range		T_{amb}	-40 to +105	°C
Storage temperature range		T_{stg}	-40 to +125	°C
Soldering temperature	In accordance with Fig. 17	T_{sd}	260	°C
INPUT (EMITTER)				
Reverse voltage		V_R	5	V
Forward current	$T_{amb} \leq 95$ °C	I_F	25	mA
Forward surge current	$t_p \leq 10$ µs	I_{FSM}	200	mA
Total power dissipation	$T_{amb} \leq 95$ °C	P_V	37.5	mW
OUTPUT (DETECTOR)				
Collector emitter voltage		V_{CEO}	20	V
Emitter collector voltage		V_{ECO}	7	V
Collector current		I_C	20	mA
Collector dark current	T_{amb} = 85 °C, V_{CE} = 5 V	I_{CEO}	3.3	µA
Total power dissipation	$T_{amb} \leq 95$ °C	P_V	37.5	mW

ABSOLUTE MAXIMUM RATINGS

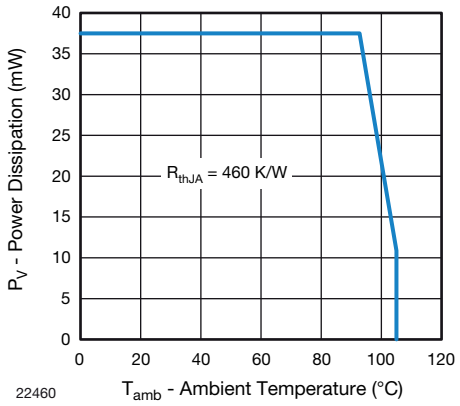

Fig. 1 - Power Dissipation Limit vs. Ambient Temperature

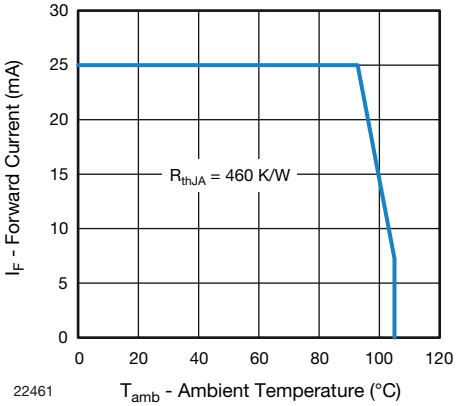

Fig. 2 - Forward Current Limit vs. Ambient Temperature

For technical questions, contact: sensorstechsupport@vishay.com
THIS DOCUMENT IS SUBJECT TO CHANGE WITHOUT NOTICE. THE PRODUCTS DESCRIBED HEREIN AND THIS DOCUMENT ARE SUBJECT TO SPECIFIC DISCLAIMERS, SET FORTH AT www.vishay.com/doc?91000

ELECTRICAL CHARACTERISTICS (T_{amb} = 25 °C, unless otherwise specified)						
PARAMETER	**TEST CONDITION**	**SYMBOL**	**MIN.**	**TYP.**	**MAX.**	**UNIT**
COUPLER						
Collector current per channel	V_{CE} = 5 V, I_F = 15 mA	I_C	0.45	1.3	-	mA
Collector emitter saturation voltage	I_F = 15 mA, I_C = 0.2 mA	V_{CEsat}	-	-	0.4	V
INPUT (EMITTER)						
Forward voltage	I_F = 15 mA	V_F	1	1.2	1.4	V
Reverse current	V_R = 5 V	I_R	-	-	10	µA
Junction capacitance	V_R = 0 V, f = 1 MHz	C_j	-	25	-	pF
OUTPUT (DETECTOR)						
Collector emitter voltage I_C	I_C = 1 mA	V_{CEO}	20	-	-	V
Emitter collector voltage	I_E = 100 µA	V_{ECO}	7	-	-	V
Collector dark current	V_{CE} = 25 V, I_F = 0 A, E = 0 lx	I_{CEO}	-	1	100	nA
SWITCHING CHARACTERISTICS						
Rise time	I_C = 0.7 mA, V_{CE} = 5 V, R_L = 100 Ω (see Fig. 3)	t_r	-	9	150	µs
Fall time	I_C = 0.7 mA, V_{CE} = 5 V, R_L = 100 Ω (see Fig. 3)	t_f	-	16	150	µs

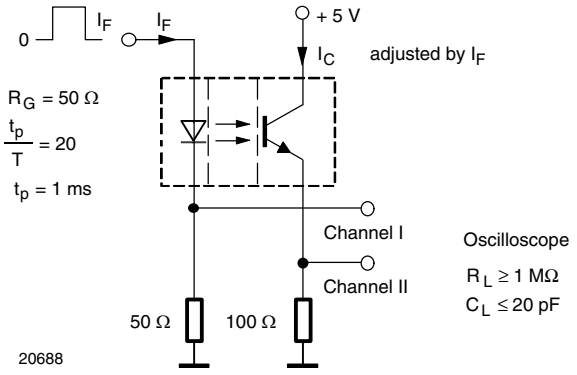

Fig. 3 - Test Circuit for t_r and t_f

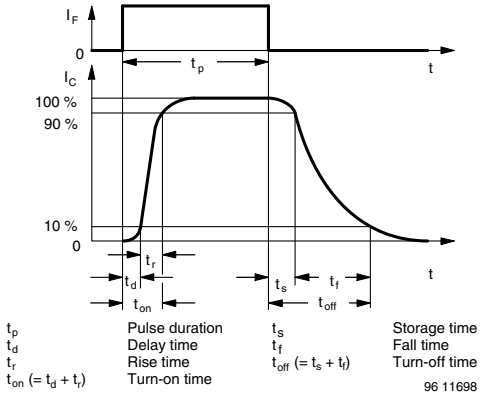

Fig. 4 - Switching Times

BASIC CHARACTERISTICS (T_{amb} = 25 °C, unless otherwise specified)

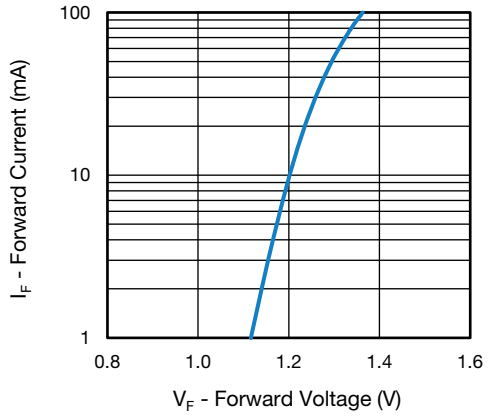

Fig. 5 - Forward Current vs. Forward Voltage

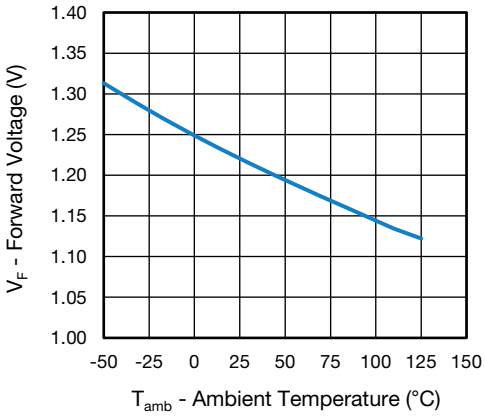

Fig. 6 - Forward Voltage vs. Ambient Temperature

For technical questions, contact: sensorstechsupport@vishay.com
THIS DOCUMENT IS SUBJECT TO CHANGE WITHOUT NOTICE. THE PRODUCTS DESCRIBED HEREIN AND THIS DOCUMENT ARE SUBJECT TO SPECIFIC DISCLAIMERS, SET FORTH AT www.vishay.com/doc?91000

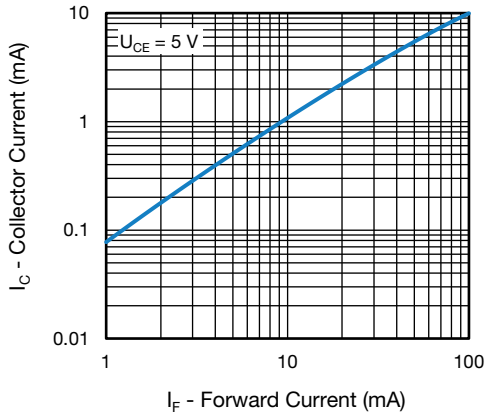

Fig. 7 - Collector Current vs. Forward Current

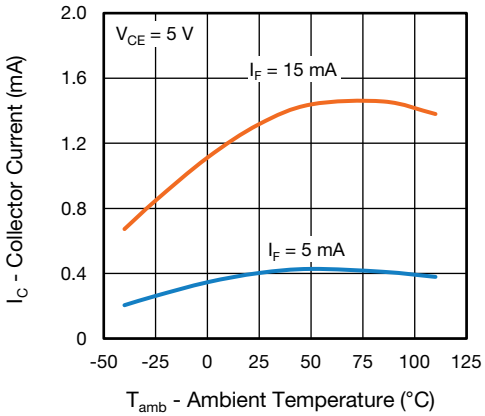

Fig. 10 - Collector Current vs. Ambient Temperature

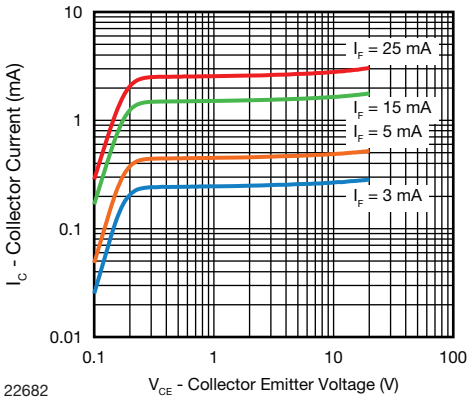

Fig. 8 - Collector Current vs. Collector Emitter Voltage

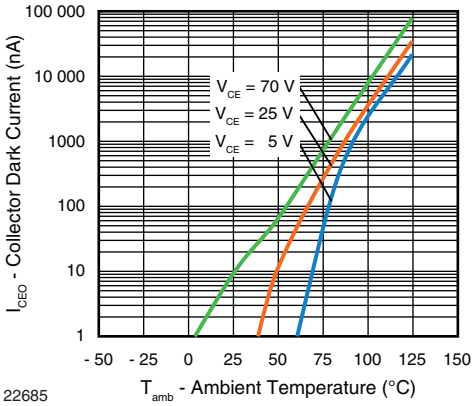

Fig. 11 - Collector Dark Current vs. Ambient Temperature

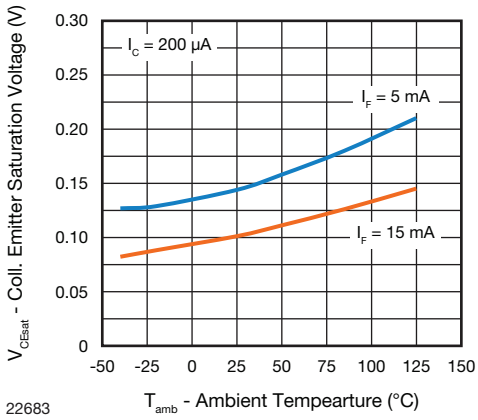

Fig. 9 - Collector Emitter Saturation Voltage vs. Ambient Temperature

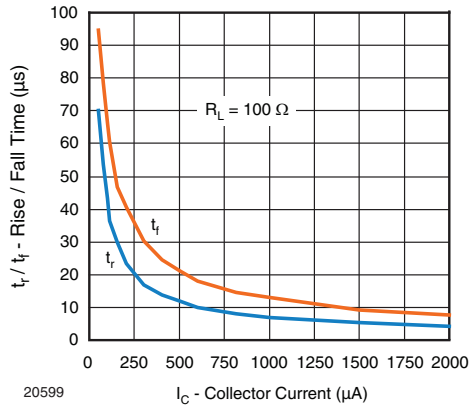

Fig. 12 - Rise / Fall Time vs. Collector Current

For technical questions, contact: sensorstechsupport@vishay.com
THIS DOCUMENT IS SUBJECT TO CHANGE WITHOUT NOTICE. THE PRODUCTS DESCRIBED HEREIN AND THIS DOCUMENT ARE SUBJECT TO SPECIFIC DISCLAIMERS, SET FORTH AT www.vishay.com/doc?91000

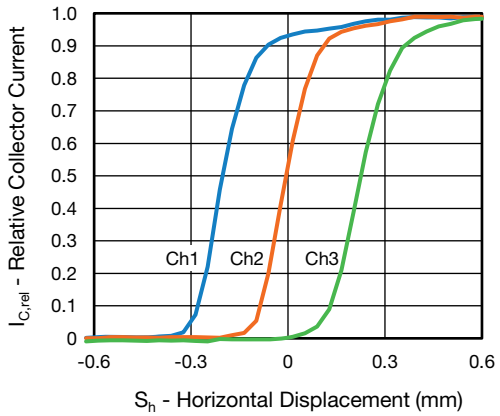

Fig. 13 - Relative Collector Current vs. Horizontal Displacement
Horizontal Shutter (0.25 mm thickness)

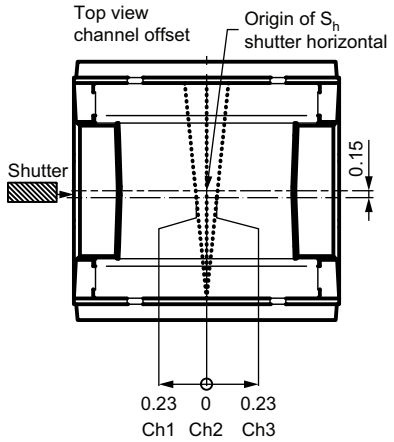

Fig. 16 - Top View Sensor
Channel Positions and Origin of Horizontal Shutter

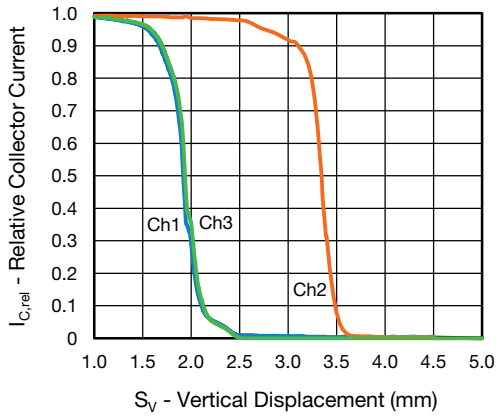

Fig. 14 - Relative Collector Current vs. Vertical Displacement
Vertical Shutter (0.25 mm thickness)

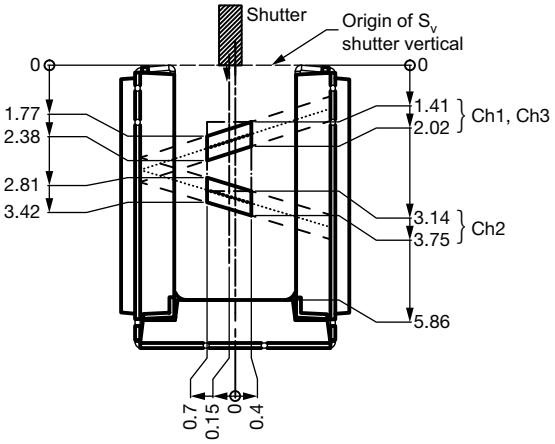

Fig. 17 - Top View Sensor
Channel Positions and Origin of Vertical Shutter

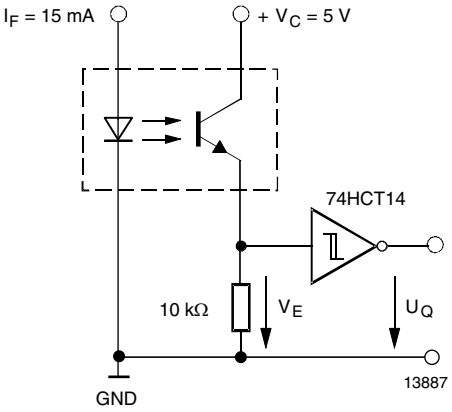

Fig. 15 - Application example

REFLOW SOLDER PROFILE

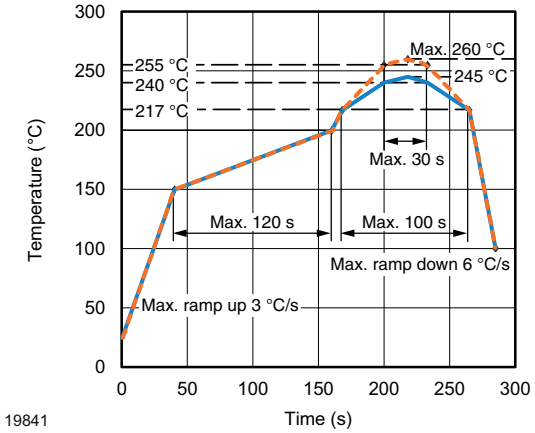

Fig. 18 - Lead (Pb)-free Reflow Solder Profile
According to J-STD-020

For technical questions, contact: sensorstechsupport@vishay.com
THIS DOCUMENT IS SUBJECT TO CHANGE WITHOUT NOTICE. THE PRODUCTS DESCRIBED HEREIN AND THIS DOCUMENT ARE SUBJECT TO SPECIFIC DISCLAIMERS, SET FORTH AT www.vishay.com/doc?91000

FLOOR LIFE

Level 1, according to JEDEC®, J-STD-020. No time limit.

PACKAGE DIMENSIONS in millimeters

Not indicated tolerances ± 0.15 mm

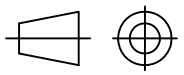

Technical drawings according to DIN specification.

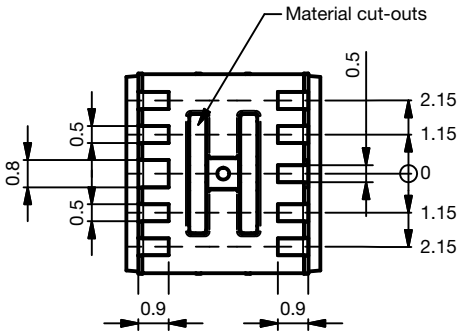

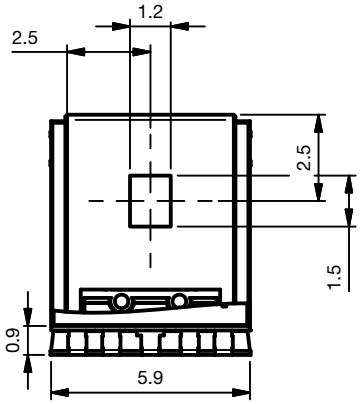

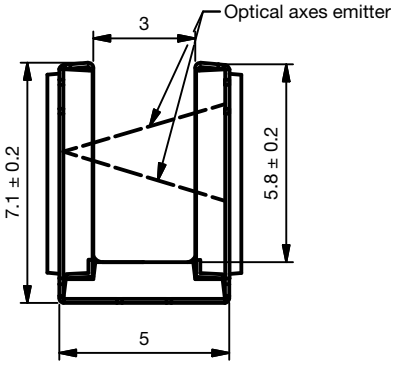

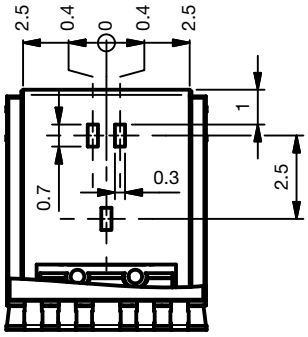

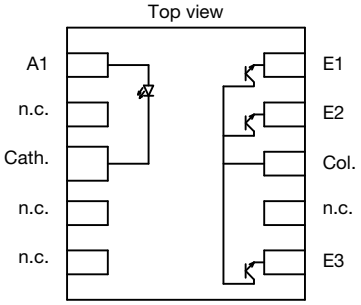

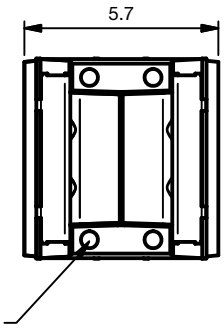

Note

- Do not connect n.c. pins to the circuit

Recommended Footprint

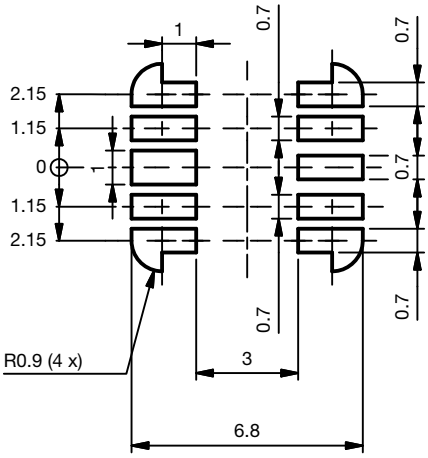

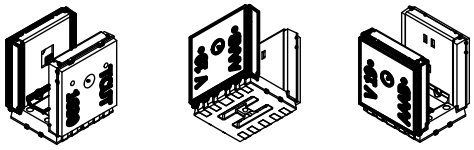

Drawing No.: 6.541-5106.01-4
Issue: 1; 20.06.2016

For technical questions, contact: sensorstechsupport@vishay.com
THIS DOCUMENT IS SUBJECT TO CHANGE WITHOUT NOTICE. THE PRODUCTS DESCRIBED HEREIN AND THIS DOCUMENT ARE SUBJECT TO SPECIFIC DISCLAIMERS, SET FORTH AT www.vishay.com/doc?91000

PACKAGE DIMENSIONS in millimeters

Volume/reel = 1100 pcs

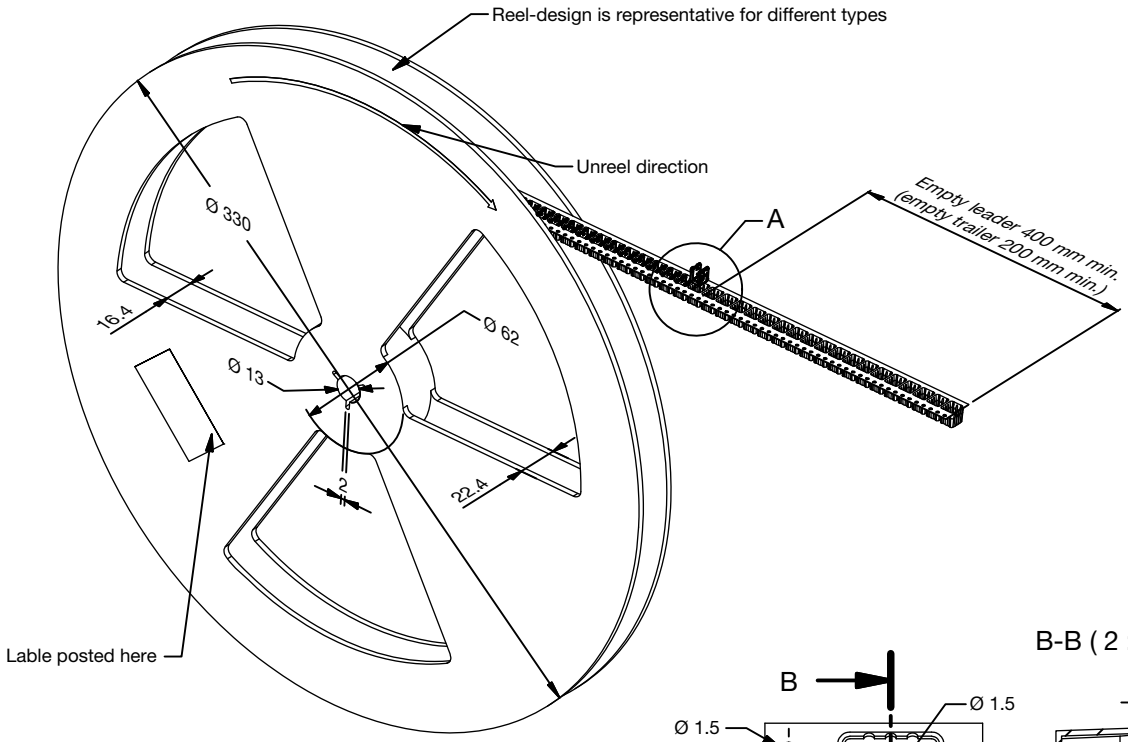

A (2 : 1)

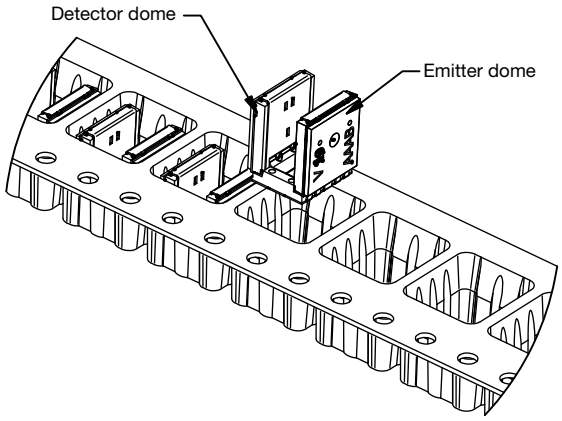

B-B (2 : 1)

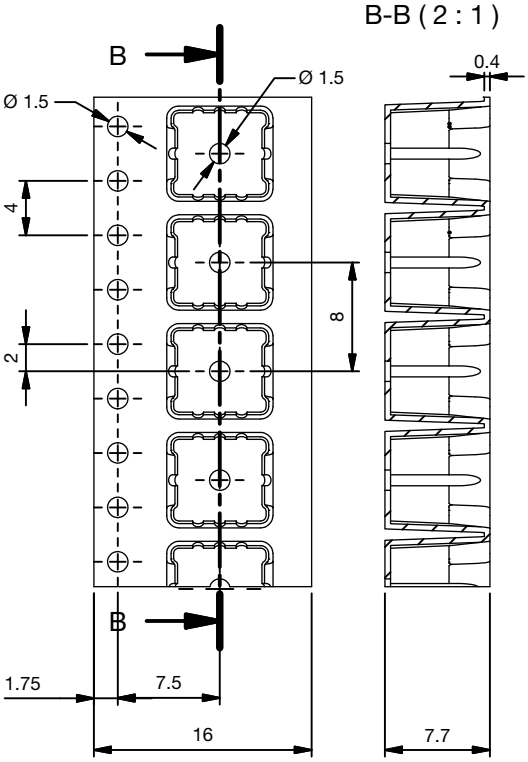

Drawing-No.: 9.800-5133.01-4
Issue: 1; 29.06.2016

For technical questions, contact: sensorstechsupport@vishay.com
THIS DOCUMENT IS SUBJECT TO CHANGE WITHOUT NOTICE. THE PRODUCTS DESCRIBED HEREIN AND THIS DOCUMENT ARE SUBJECT TO SPECIFIC DISCLAIMERS, SET FORTH AT www.vishay.com/doc?91000

Disclaimer

ALL PRODUCT, PRODUCT SPECIFICATIONS AND DATA ARE SUBJECT TO CHANGE WITHOUT NOTICE TO IMPROVE RELIABILITY, FUNCTION OR DESIGN OR OTHERWISE.

Vishay Intertechnology, Inc., its affiliates, agents, and employees, and all persons acting on its or their behalf (collectively, “Vishay”), disclaim any and all liability for any errors, inaccuracies or incompleteness contained in any datasheet or in any other disclosure relating to any product.

Vishay makes no warranty, representation or guarantee regarding the suitability of the products for any particular purpose or the continuing production of any product. To the maximum extent permitted by applicable law, Vishay disclaims (i) any and all liability arising out of the application or use of any product, (ii) any and all liability, including without limitation special, consequential or incidental damages, and (iii) any and all implied warranties, including warranties of fitness for particular purpose, non-infringement and merchantability.

Statements regarding the suitability of products for certain types of applications are based on Vishay's knowledge of typical requirements that are often placed on Vishay products in generic applications. Such statements are not binding statements about the suitability of products for a particular application. It is the customer's responsibility to validate that a particular product with the properties described in the product specification is suitable for use in a particular application. Parameters provided in datasheets and / or specifications may vary in different applications and performance may vary over time. All operating parameters, including typical parameters, must be validated for each customer application by the customer's technical experts. Product specifications do not expand or otherwise modify Vishay's terms and conditions of purchase, including but not limited to the warranty expressed therein.

Hyperlinks included in this datasheet may direct users to third-party websites. These links are provided as a convenience and for informational purposes only. Inclusion of these hyperlinks does not constitute an endorsement or an approval by Vishay of any of the products, services or opinions of the corporation, organization or individual associated with the third-party website. Vishay disclaims any and all liability and bears no responsibility for the accuracy, legality or content of the third-party website or for that of subsequent links.

Vishay products are not designed for use in life-saving or life-sustaining applications or any application in which the failure of the Vishay product could result in personal injury or death unless specifically qualified in writing by Vishay. Customers using or selling Vishay products not expressly indicated for use in such applications do so at their own risk. Please contact authorized Vishay personnel to obtain written terms and conditions regarding products designed for such applications.

No license, express or implied, by estoppel or otherwise, to any intellectual property rights is granted by this document or by any conduct of Vishay. Product names and markings noted herein may be trademarks of their respective owners.

© 2026 VISHAY INTERTECHNOLOGY, INC. ALL RIGHTS RESERVED

THIS DOCUMENT IS SUBJECT TO CHANGE WITHOUT NOTICE. THE PRODUCTS DESCRIBED HEREIN AND THIS DOCUMENT ARE SUBJECT TO SPECIFIC DISCLAIMERS, SET FORTH AT www.vishay.com/doc?91000