Silicon PIN Photodiode

VEMD2003X01 VEMD2023X01

DESCRIPTION

VEMD2003X01 and VEMD2023X01 are high speed and high sensitive PIN photodiodes in a miniature surface mount package (SMD) with dome lens and daylight blocking filter. Filter is matched with IR emitters operating at wavelength of 830 nm to 950 nm. The photo sensitive area of the chip is 0.23 mm^2.

FEATURES

- Package type: surface mount
- Package form: GW, RGW
- Dimensions (L x W x H in mm): 2.3 x 2.3 x 2.55
- AEC-Q101 qualified
- High radiant sensitivity
- Daylight blocking filter matched with 830 nm to 950 nm IR emitters
- Fast response times
- Angle of half sensitivity: $\varphi = \pm 35°$
- Package matched with IR emitter series VSMB2943X01
- Floor life: 4 weeks, MSL 2a, acc. J-STD-020
- Lead (Pb)-free reflow soldering
- Material categorization: For definitions of compliance please see www.vishay.com/doc?99912

AUTOMOTIVE GRADE
Pb-free
e3
RoHS COMPLIANT
HALOGEN FREE
GREEN (5-2008)

APPLICATIONS

- High speed photo detector
- Infrared remote control
- Infrared data transmission
- Photo interrupters
- IR touch panels

PRODUCT SUMMARY

COMPONENT	I_{ra} (µA)	φ (deg)	$\lambda_{0.5}$ (nm)
VEMD2003X01	10	± 35	750 to 1050
VEMD2023X01	10	± 35	750 to 1050

Note

- Test conditions see table “Basic Characteristics”

ORDERING INFORMATION

ORDERING CODE	PACKAGING	REMARKS	PACKAGE FORM
VEMD2003X01	Tape and reel	MOQ: 6000 pcs, 6000 pcs/reel	Reverse gullwing
VEMD2023X01	Tape and reel	MOQ: 6000 pcs, 6000 pcs/reel	Gullwing

Note

- MOQ: minimum order quantity

ABSOLUTE MAXIMUM RATINGS (T_{amb} = 25 °C, unless otherwise specified)

PARAMETER	TEST CONDITION	SYMBOL	VALUE	UNIT
Reverse voltage		V_R	60	V
Power dissipation	$T_{amb} \leq 25$ °C	P_V	215	mW
Junction temperature		T_j	100	°C
Operating temperature range		T_{amb}	- 40 to + 100	°C
Storage temperature range		T_{stg}	- 40 to + 100	°C
Soldering temperature	Acc. reflow solder profile fig. 7	T_{sd}	260	°C
Thermal resistance junction/ambient	Acc. J-STD-051	R_{thJA}	250	K/W

For technical questions, contact: detectortechsupport@vishay.com
THIS DOCUMENT IS SUBJECT TO CHANGE WITHOUT NOTICE. THE PRODUCTS DESCRIBED HEREIN AND THIS DOCUMENT ARE SUBJECT TO SPECIFIC DISCLAIMERS, SET FORTH AT www.vishay.com/doc?91000

BASIC CHARACTERISTICS (T_{amb} = 25 °C, unless otherwise specified)						
PARAMETER	**TEST CONDITION**	**SYMBOL**	**MIN.**	**TYP.**	**MAX.**	**UNIT**
Forward voltage	I_F = 50 mA	V_F		1		V
Breakdown voltage	I_R = 100 µA, E = 0	$V_{(BR)}$	32			V
Reverse dark current	V_R = 10 V, E = 0	I_{ro}		1	10	nA
Diode capacitance	V_R = 0 V, f = 1 MHz, E = 0	C_D		4		pF
	V_R = 5 V, f = 1 MHz, E = 0	C_D		1.3		pF
Open circuit voltage	E_e = 1 mW/cm², λ = 950 nm	V_o		350		mV
Temperature coefficient of V_o	E_e = 1 mW/cm², λ = 950 nm	TK_{Vo}		- 2.6		mV/K
Short circuit current	E_e = 1 mW/cm², λ = 950 nm	I_k		10		µA
Temperature coefficient of I_k	E_e = 1 mW/cm², λ = 950 nm	TK_{Ik}		0.1		%/K
Reverse light current	E_e = 1 mW/cm², λ = 950 nm, V_R = 5 V	I_{ra}	7	10	14	µA
Angle of half sensitivity		φ		± 35		deg
Wavelength of peak sensitivity		λ_p		940		nm
Range of spectral bandwidth		$\lambda_{0.5}$		750 to 1050		nm
Rise time	V_R = 10 V, R_L = 1 kΩ, λ = 820 nm	t_r		100		ns
Fall time	V_R = 10 V, R_L = 1 kΩ, λ = 820 nm	t_f		100		ns

BASIC CHARACTERISTICS (T_{amb} = 25 °C, unless otherwise specified)

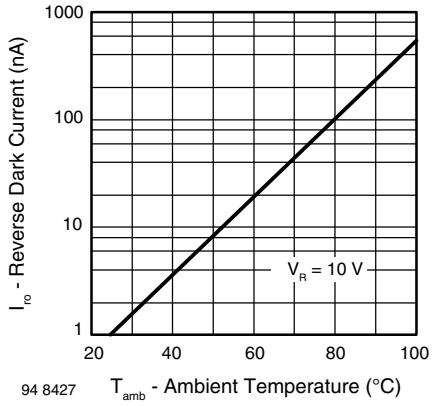

Fig. 1 - Reverse Dark Current vs. Ambient Temperature

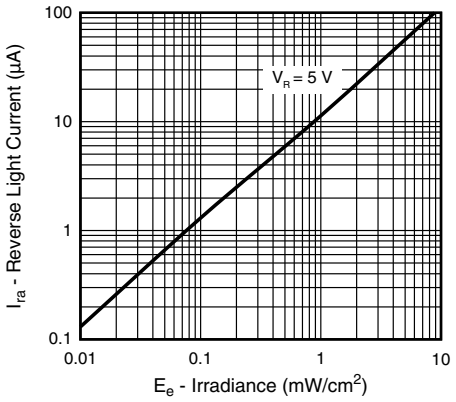

Fig. 3 - Reverse Light Current vs. Irradiance

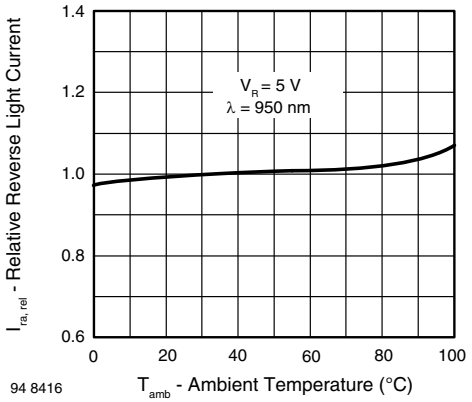

Fig. 2 - Relative Reverse Light Current vs. Ambient Temperature

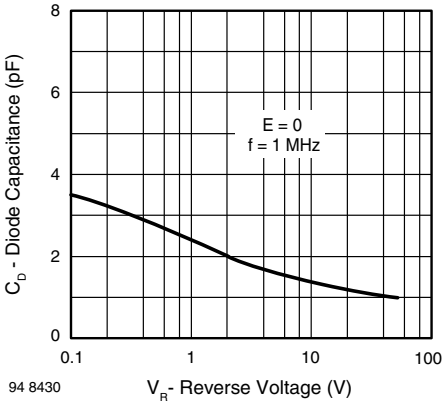

Fig. 4 - Diode Capacitance vs. Reverse Voltage

For technical questions, contact: detectortechsupport@vishay.com
THIS DOCUMENT IS SUBJECT TO CHANGE WITHOUT NOTICE. THE PRODUCTS DESCRIBED HEREIN AND THIS DOCUMENT ARE SUBJECT TO SPECIFIC DISCLAIMERS, SET FORTH AT www.vishay.com/doc?91000

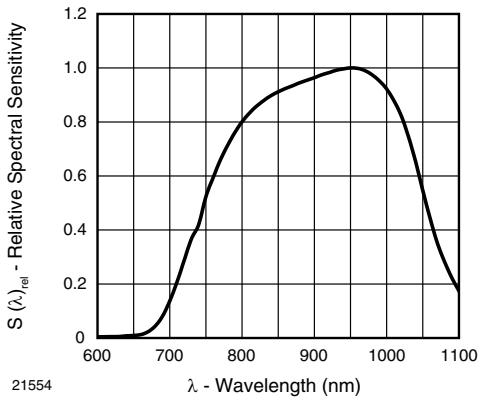

Fig. 5 - Relative Spectral Sensitivity vs. Wavelength

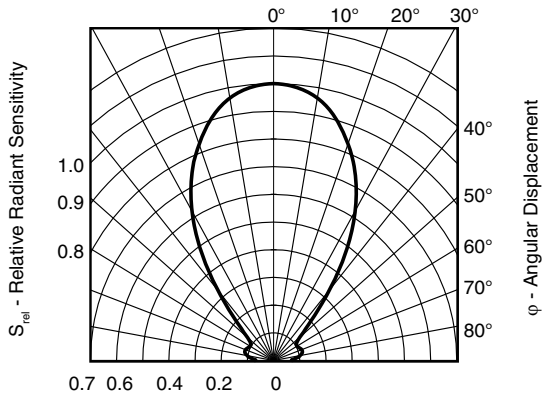

Fig. 6 - Relative Radiant Intensity vs. Angular Displacement

REFLOW SOLDER PROFILE

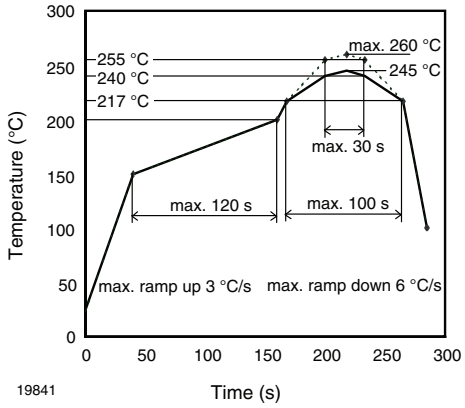

Fig. 7 - Lead (Pb)-free Reflow Solder Profile acc. J-STD-020D

DRYPACK

Devices are packed in moisture barrier bags (MBB) to prevent the products from moisture absorption during transportation and storage. Each bag contains a desiccant.

FLOOR LIFE

Floor life (time between soldering and removing from MBB) must not exceed the time indicated on MBB label:
Floor life: 4 weeks
Conditions: T_{amb} < 30 °C, RH < 60 %
Moisture sensitivity level 2a, acc. to J-STD-020.

DRYING

In case of moisture absorption devices should be baked before soldering. Conditions see J-STD-020 or label. Devices taped on reel dry using recommended conditions 192 h at 40 °C (+ 5 °C), RH < 5 %.

For technical questions, contact: detectortechsupport@vishay.com
THIS DOCUMENT IS SUBJECT TO CHANGE WITHOUT NOTICE. THE PRODUCTS DESCRIBED HEREIN AND THIS DOCUMENT ARE SUBJECT TO SPECIFIC DISCLAIMERS, SET FORTH AT www.vishay.com/doc?91000

PACKAGE DIMENSIONS in millimeters: **VEMD2003**

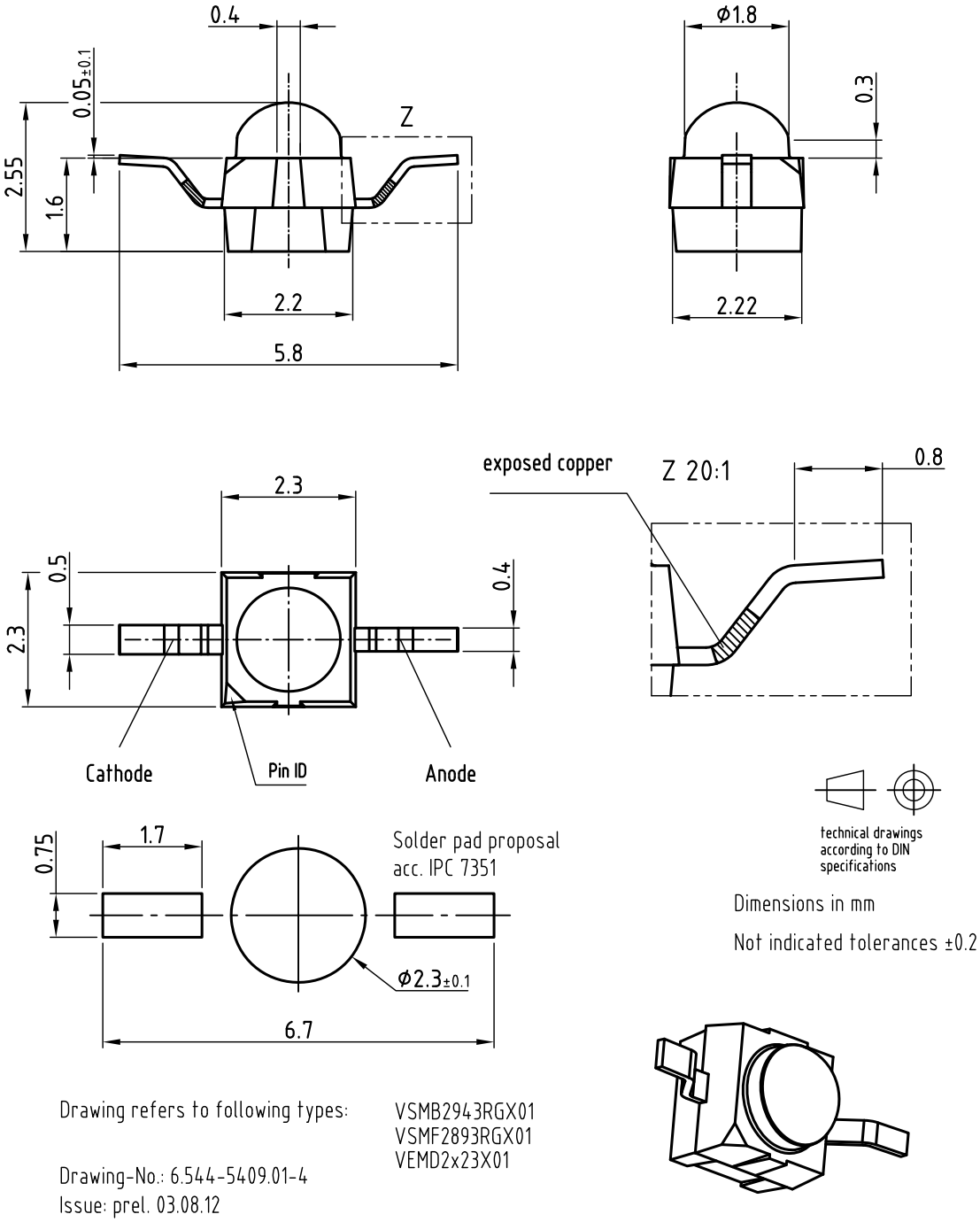

Drawing refers to following types: VSMB2943RGX01, VSMF2893RGX01, VEMD2x23X01

Drawing-No.: 6.544-5409.01-4
Issue: prel. 03.08.12

For technical questions, contact: detectortechsupport@vishay.com
THIS DOCUMENT IS SUBJECT TO CHANGE WITHOUT NOTICE. THE PRODUCTS DESCRIBED HEREIN AND THIS DOCUMENT ARE SUBJECT TO SPECIFIC DISCLAIMERS, SET FORTH AT www.vishay.com/doc?91000

PACKAGE DIMENSIONS in millimeters: **VEMD2023**

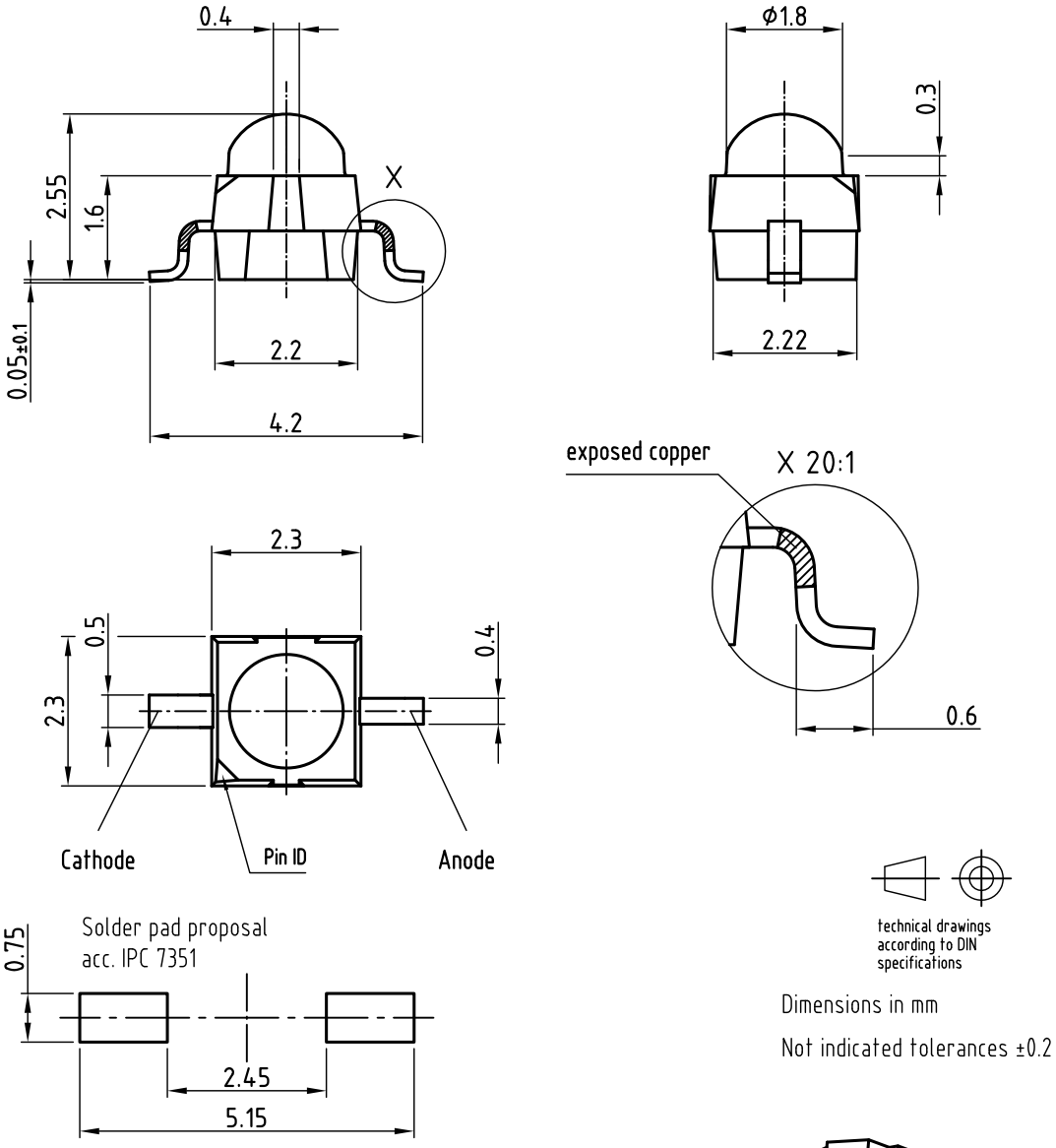

Dimensions in mm

Not indicated tolerances ±0.2

Drawing refers to following types: VSMB2943GX01
VSMF2893GX01
VEMD2x23X01

Drawing-No.: 6.544-5408.01-4
Issue: prel; 03.08.12

For technical questions, contact: detectortechsupport@vishay.com
THIS DOCUMENT IS SUBJECT TO CHANGE WITHOUT NOTICE. THE PRODUCTS DESCRIBED HEREIN AND THIS DOCUMENT ARE SUBJECT TO SPECIFIC DISCLAIMERS, SET FORTH AT www.vishay.com/doc?91000

TAPING AND REEL DIMENSIONS in millimeters: **VEMD2003**

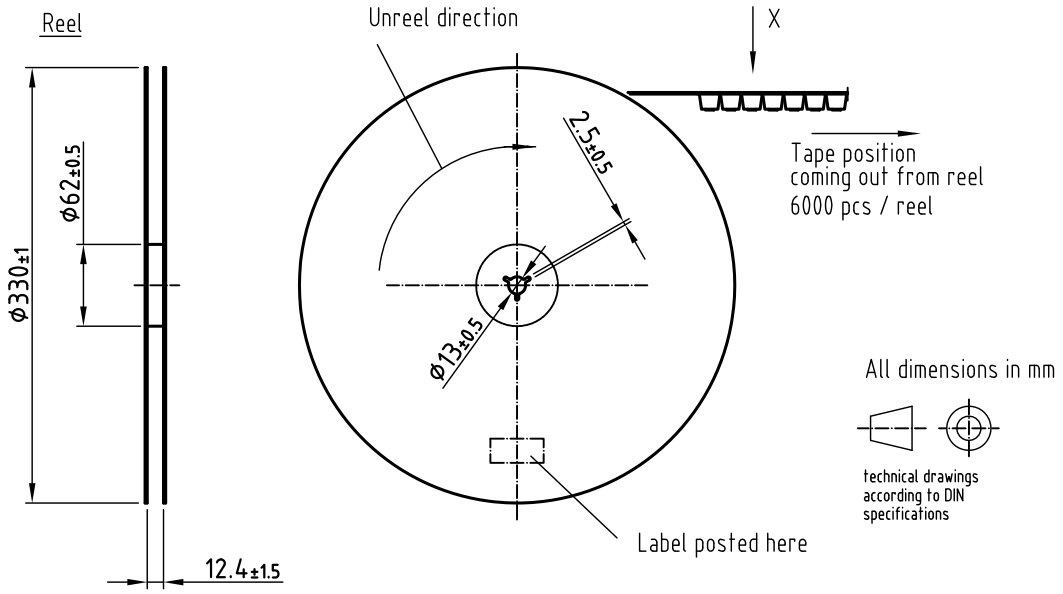

Leader and trailer tape:

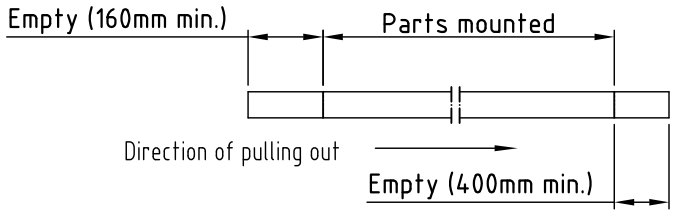

Terminal position in tape

Device	Lead I	Lead II
VSMB2943RGX01	Cathode	Anode
VSMF2893RGX01		
VEMD2x03X01		
VEMT2x03X01	Collector	Emitter
VSMY2853RG	Anode	Cathode

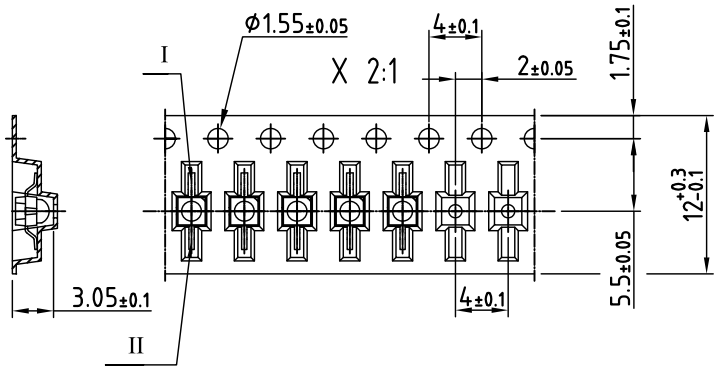

Drawing refers to following types: see table
Reel dimensions and tape

Drawing-No.: 9.800-5100.02-4
Issue: prel; 03.08.12

For technical questions, contact: detectortechsupport@vishay.com
THIS DOCUMENT IS SUBJECT TO CHANGE WITHOUT NOTICE. THE PRODUCTS DESCRIBED HEREIN AND THIS DOCUMENT ARE SUBJECT TO SPECIFIC DISCLAIMERS, SET FORTH AT www.vishay.com/doc?91000

TAPING AND REEL DIMENSIONS in millimeters: **VEMD2023**

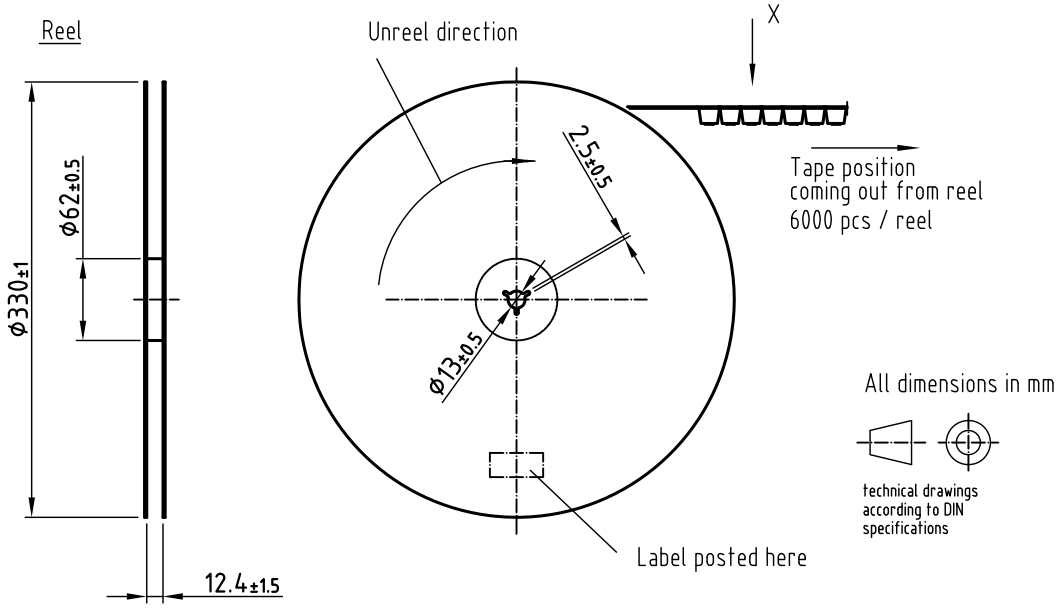

Leader and trailer tape:

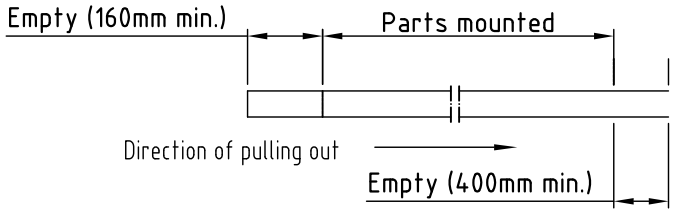

Terminal position in tape

Device	Lead I	Lead II
VSMB2943GX01	Cathode	Anode
VSMF2893GX01		
VEMD2x23X01		
VEMT2x23X01	Collector	Emitter
VSMY2853G	Anode	Cathode

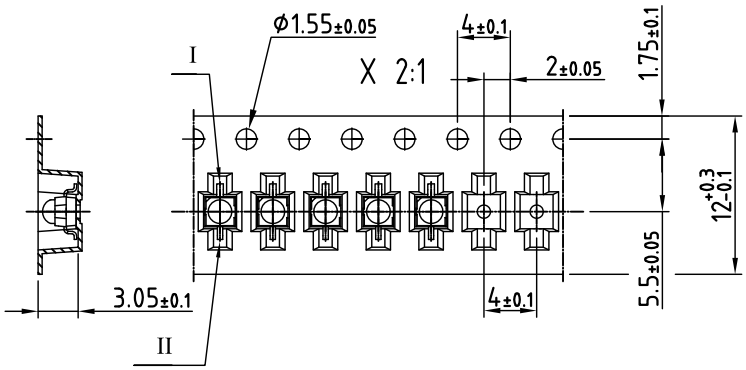

Drawing refers to following types: see table
Reel dimensions and tape

Drawing-No.: 9.800-5091.21-4
Issue: prel; 03.08.12

For technical questions, contact: detectortechsupport@vishay.com
THIS DOCUMENT IS SUBJECT TO CHANGE WITHOUT NOTICE. THE PRODUCTS DESCRIBED HEREIN AND THIS DOCUMENT ARE SUBJECT TO SPECIFIC DISCLAIMERS, SET FORTH AT www.vishay.com/doc?91000

Disclaimer

ALL PRODUCT, PRODUCT SPECIFICATIONS AND DATA ARE SUBJECT TO CHANGE WITHOUT NOTICE TO IMPROVE RELIABILITY, FUNCTION OR DESIGN OR OTHERWISE.

Vishay Intertechnology, Inc., its affiliates, agents, and employees, and all persons acting on its or their behalf (collectively, “Vishay”), disclaim any and all liability for any errors, inaccuracies or incompleteness contained in any datasheet or in any other disclosure relating to any product.

Vishay makes no warranty, representation or guarantee regarding the suitability of the products for any particular purpose or the continuing production of any product. To the maximum extent permitted by applicable law, Vishay disclaims (i) any and all liability arising out of the application or use of any product, (ii) any and all liability, including without limitation special, consequential or incidental damages, and (iii) any and all implied warranties, including warranties of fitness for particular purpose, non-infringement and merchantability.

Statements regarding the suitability of products for certain types of applications are based on Vishay's knowledge of typical requirements that are often placed on Vishay products in generic applications. Such statements are not binding statements about the suitability of products for a particular application. It is the customer's responsibility to validate that a particular product with the properties described in the product specification is suitable for use in a particular application. Parameters provided in datasheets and / or specifications may vary in different applications and performance may vary over time. All operating parameters, including typical parameters, must be validated for each customer application by the customer's technical experts. Product specifications do not expand or otherwise modify Vishay's terms and conditions of purchase, including but not limited to the warranty expressed therein.

Hyperlinks included in this datasheet may direct users to third-party websites. These links are provided as a convenience and for informational purposes only. Inclusion of these hyperlinks does not constitute an endorsement or an approval by Vishay of any of the products, services or opinions of the corporation, organization or individual associated with the third-party website. Vishay disclaims any and all liability and bears no responsibility for the accuracy, legality or content of the third-party website or for that of subsequent links.

Vishay products are not designed for use in life-saving or life-sustaining applications or any application in which the failure of the Vishay product could result in personal injury or death unless specifically qualified in writing by Vishay. Customers using or selling Vishay products not expressly indicated for use in such applications do so at their own risk. Please contact authorized Vishay personnel to obtain written terms and conditions regarding products designed for such applications.

No license, express or implied, by estoppel or otherwise, to any intellectual property rights is granted by this document or by any conduct of Vishay. Product names and markings noted herein may be trademarks of their respective owners.

© 2026 VISHAY INTERTECHNOLOGY, INC. ALL RIGHTS RESERVED

THIS DOCUMENT IS SUBJECT TO CHANGE WITHOUT NOTICE. THE PRODUCTS DESCRIBED HEREIN AND THIS DOCUMENT ARE SUBJECT TO SPECIFIC DISCLAIMERS, SET FORTH AT www.vishay.com/doc?91000