Ambient Light Sensor

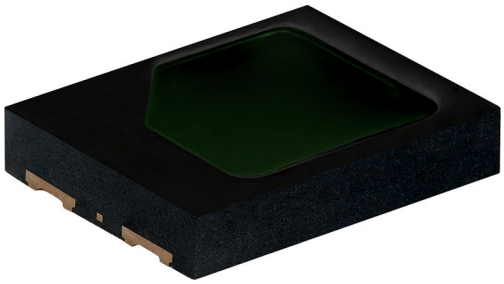

FEATURES

- Package type: surface-mount
- Package form: top view
- Dimensions (L x W x H in mm): 5 x 4 x 0.9
- Photosensitive area (in mm^2): 7.5
- AEC-Q102 qualified
- Adapted to human eye responsitivity
- Angle of half sensitivity: φ = ± 58°
- Floor life: 72 h, MSL 4, according to J-STD-020
- Material categorization: for definitions of compliance please see www.vishay.com/doc?99912

AUTOMOTIVE GRADE
Pb-free
e4
RoHS COMPLIANT
HALOGEN FREE
GREEN (5-2008)

DESCRIPTION

VEMD5525FX02 is a PIN photodiode ambient light sensor. The photodiode detects visible light much like the human eye and has its peak sensitivity at 530 nm.

The VEMD5525FX02 uses a low profile surface-mount QFN package with wettable flanks for optical solder joint inspection.

APPLICATIONS

- Automotive
- Ambient light sensors

PRODUCT SUMMARY

COMPONENT	I_{ra} (µA) at E_V = 100 lx, CIE Illuminant A, V_R = 5 V	φ (°)	$\lambda_{0.5}$ (nm)
VEMD5525FX02	0.11	± 58	480 to 590

Note

- Test conditions see table “Basic Characteristics”

ORDERING INFORMATION

ORDERING CODE	PACKAGING	REMARKS	PACKAGE FORM
VEMD5525FX02	Tape and reel	MOQ: 1000 pcs, 1000 pcs/reel	Top view
VEMD5525FX02-GS15	Tape and reel	MOQ: 5000 pcs, 5000 pcs/reel	Top view

Note

- MOQ: minimum order quantity

ABSOLUTE MAXIMUM RATINGS (T_{amb} = 25 °C, unless otherwise specified)

PARAMETER	TEST CONDITION	SYMBOL	VALUE	UNIT
Reverse voltage		V_R	15	V
Ambient temperature range		T_{amb}	-40 to +110	°C
Storage temperature range		T_{stg}	-40 to +110	°C
Soldering temperature	According to reflow solder profile Fig. 7	T_{sd}	260	°C
ESD safety HBM	± 2000 V, 1.5 kΩ, 100 pF, 3 pulses	ESD_{HBM}	≥ 2	kV

For technical questions, contact: detectortechsupport@vishay.com
THIS DOCUMENT IS SUBJECT TO CHANGE WITHOUT NOTICE. THE PRODUCTS DESCRIBED HEREIN AND THIS DOCUMENT ARE SUBJECT TO SPECIFIC DISCLAIMERS, SET FORTH AT www.vishay.com/doc?91000

BASIC CHARACTERISTICS (T_{amb} = 25 °C, unless otherwise specified)						
PARAMETER	**TEST CONDITION**	**SYMBOL**	**MIN.**	**TYP.**	**MAX.**	**UNIT**
Forward voltage	I_F = 50 mA	V_F	-	0.8	1.3	V
Reverse dark current	V_R = 5 V, E = 0	I_{ro}	-	0.2	10	nA
Diode capacitance	V_R = 0 V, f = 1 MHz, E = 0	C_D	-	930	-	pF
	V_R = 3 V, f = 1 MHz, E = 0	C_D	-	637	-	pF
Open circuit voltage	E_e = 1 mW/cm², λ = 530 nm	V_O	-	487	-	mV
Temperature coefficient of V_O	E_e = 1 mW/cm², λ = 530 nm	TK_{VO}	-	-2.4	-	mV/K
Short circuit current	E_e = 1 mW/cm², λ = 530 nm	I_K	-	8.8	-	µA
Temperature coefficient of I_K	E_e = 1 mW/cm², λ = 530 nm	TK_{IK}	-	0.1	-	%/K
Reverse light current	E_e = 0.25 mW/cm², λ = 530 nm, V_R = 5 V	I_{ra}	1.5	2.7	4.0	µA
	E_V = 100 lx, CIE illuminant A, V_R = 5 V	I_{ra}	-	0.11	-	µA
	E_V = 1000 lx, white LED 4300 K, V_R = 5 V	I_{ra}	0.7	1.9	3.3	µA
Temperature coefficient of I_{ra}	E_e = 1 mW/cm², λ = 530 nm, V_R = 5 V	TK_{Ira}	-	0.1	-	%/K
Angle of half sensitivity		φ	-	± 58	-	°
Wavelength of peak sensitivity		λ_p	-	530	-	nm
Range of spectral bandwidth		$\lambda_{0.5}$	-	480 to 590	-	nm
Rise time	V_R = 10 V, R_L = 50 Ω, λ = 530 nm	t_r	-	500	-	ns
Fall time	V_R = 10 V, R_L = 50 Ω, λ = 530 nm	t_f	-	500	-	ns

BASIC CHARACTERISTICS (T_{amb} = 25 °C, unless otherwise specified)

Basic characteristics graphs to be extended to 110 °C ambient temperatures where applicable.

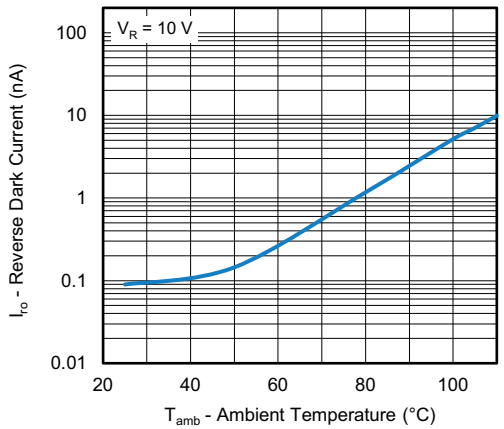

Fig. 1 - Reverse Dark Current vs. Ambient Temperature

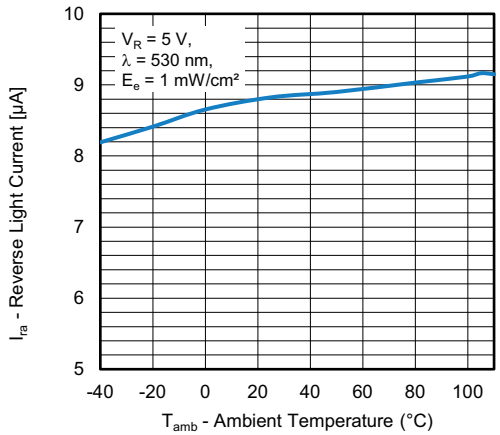

Fig. 2 - Relative Reverse Light Current vs. Ambient Temperature

For technical questions, contact: detectortechsupport@vishay.com
THIS DOCUMENT IS SUBJECT TO CHANGE WITHOUT NOTICE. THE PRODUCTS DESCRIBED HEREIN AND THIS DOCUMENT ARE SUBJECT TO SPECIFIC DISCLAIMERS, SET FORTH AT www.vishay.com/doc?91000

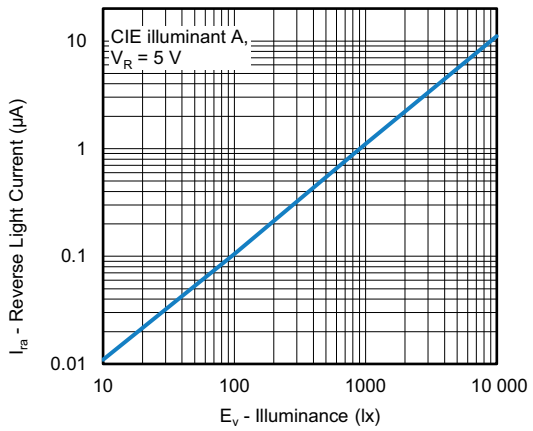

Fig. 3 - Reverse Light Current vs. Illuminance

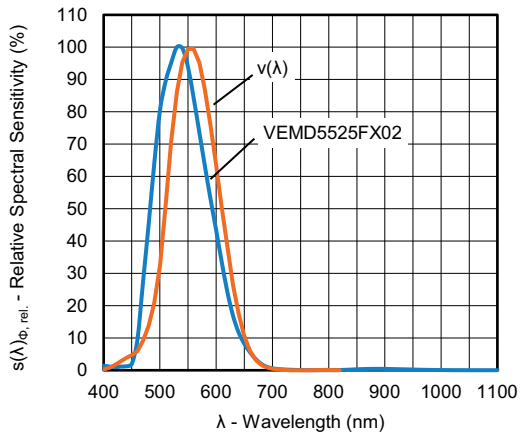

Fig. 5 - Relative Spectral Sensitivity vs. Wavelength

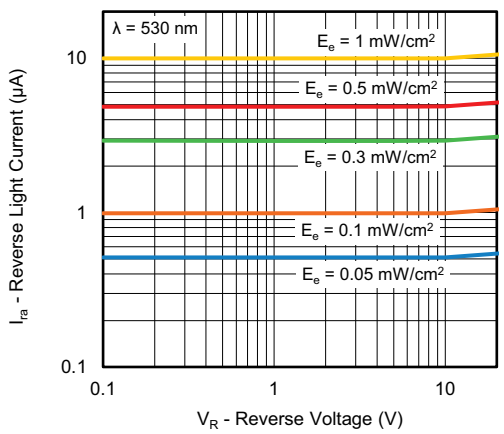

Fig. 4 - Reverse Light Current vs. Reverse Voltage

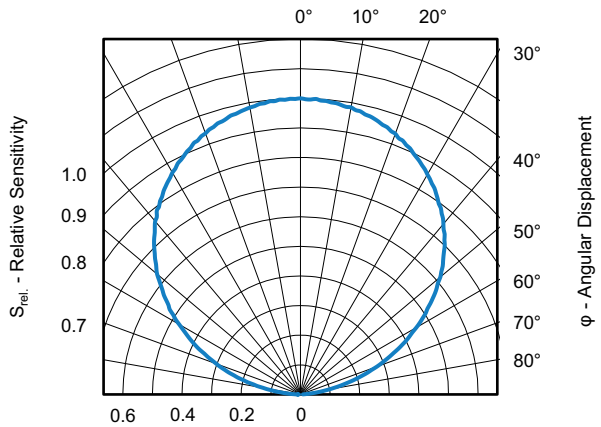

Fig. 6 - Relative Sensitivity vs. Angular Displacement

For technical questions, contact: detectortechsupport@vishay.com
THIS DOCUMENT IS SUBJECT TO CHANGE WITHOUT NOTICE. THE PRODUCTS DESCRIBED HEREIN AND THIS DOCUMENT ARE SUBJECT TO SPECIFIC DISCLAIMERS, SET FORTH AT www.vishay.com/doc?91000

PACKAGE DIMENSIONS in millimeters

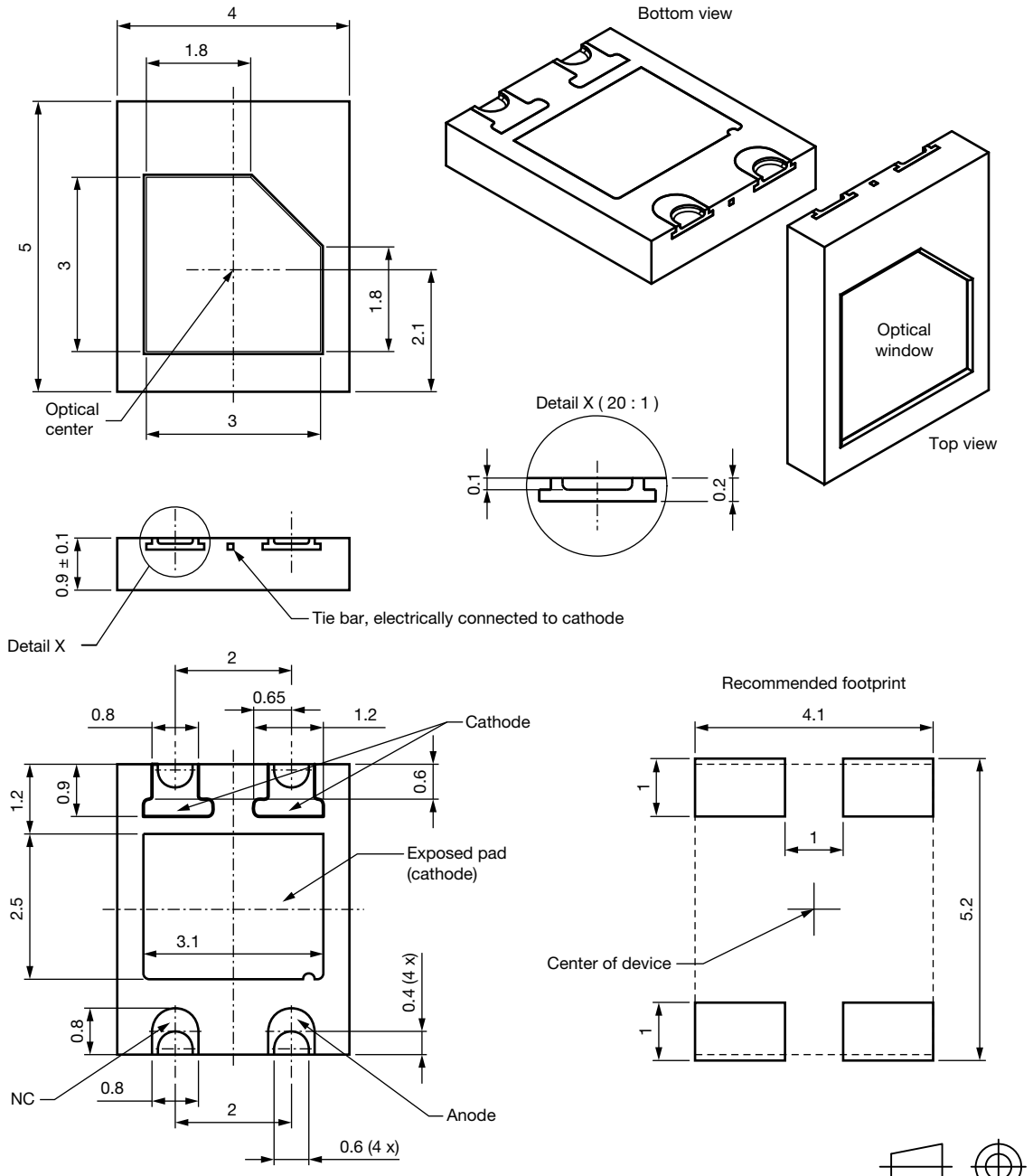

Drawing- No.: 6.550-5329.01-4
Issue: 5; 23.09.2020

Not indicated tolerances ± 0.1

Technical drawings according to DIN specification

For technical questions, contact: detectortechsupport@vishay.com
THIS DOCUMENT IS SUBJECT TO CHANGE WITHOUT NOTICE. THE PRODUCTS DESCRIBED HEREIN AND THIS DOCUMENT ARE SUBJECT TO SPECIFIC DISCLAIMERS, SET FORTH AT www.vishay.com/doc?91000

TAPE AND REEL DIMENSIONS in millimeters

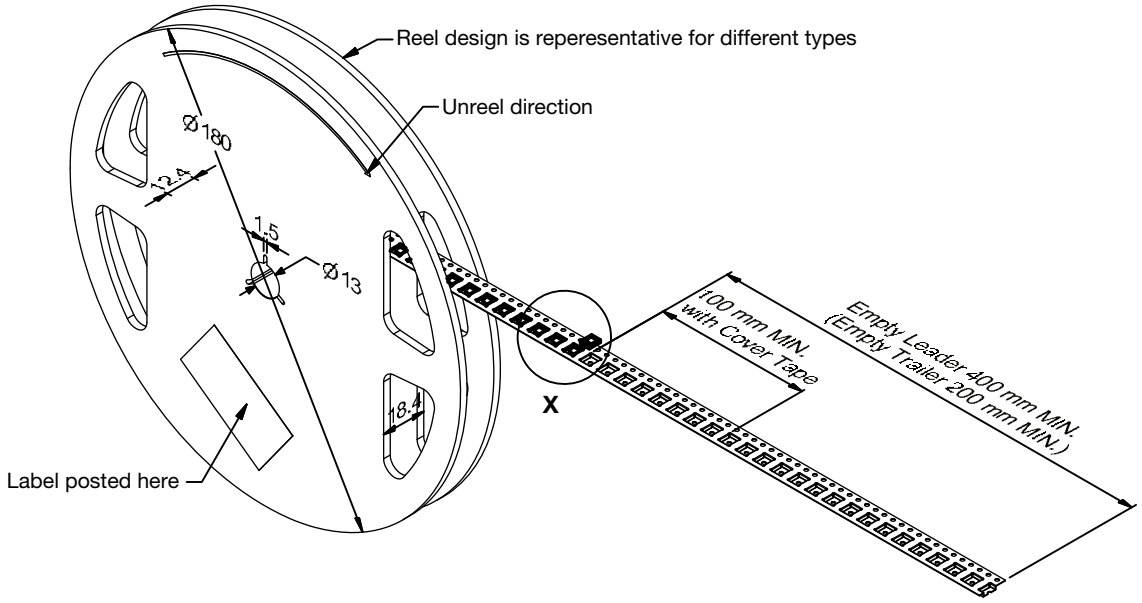

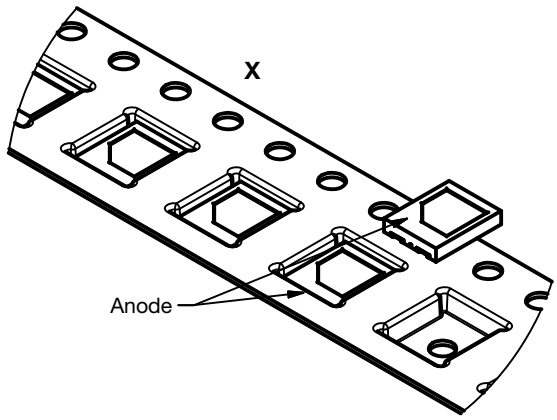

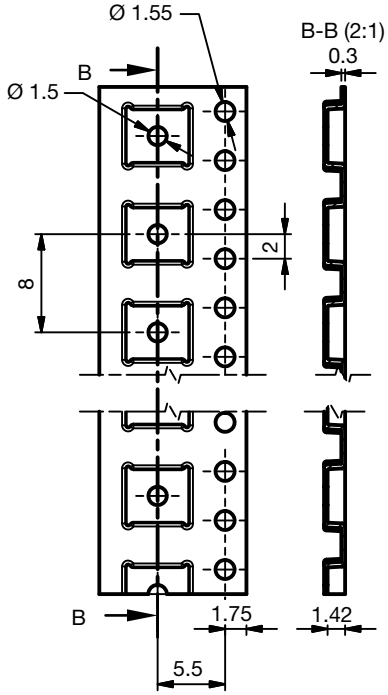

Drawing-No.: 9.800-5129.01-4;
Issue: 2; 23.09.2020

For technical questions, contact: detectortechsupport@vishay.com
THIS DOCUMENT IS SUBJECT TO CHANGE WITHOUT NOTICE. THE PRODUCTS DESCRIBED HEREIN AND THIS DOCUMENT ARE SUBJECT TO SPECIFIC DISCLAIMERS, SET FORTH AT www.vishay.com/doc?91000

SOLDER PROFILE

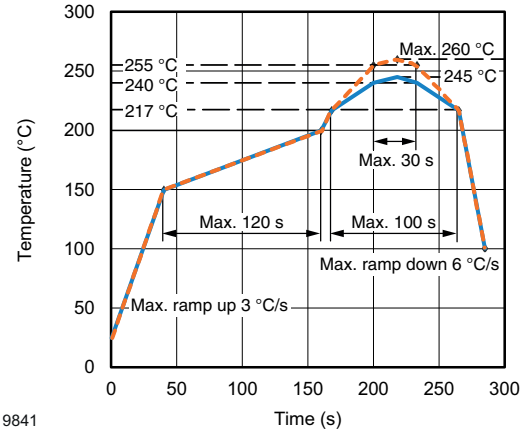

Fig. 7 - Lead (Pb)-free Reflow Solder Profile According to J-STD-020D

DRYPACK

Devices are packed in moisture barrier bags (MBB) to prevent the products from moisture absorption during transportation and storage. Each bag contains a desiccant.

FLOOR LIFE

Time between soldering and removing from MBB must not exceed the time indicated in J-STD-020:

Moisture sensitivity: level 4

Floor life: 72 h

Conditions: T_{amb} < 30 °C, RH < 60 %

DRYING

In case of moisture absorption devices should be baked before soldering. Conditions see J-STD-033D or recommended conditions:

192 h at 40 °C (+ 5 °C), RH < 5 %
or
96 h at 60 °C (+ 5 °C), RH < 5 %

For technical questions, contact: detectortechsupport@vishay.com
THIS DOCUMENT IS SUBJECT TO CHANGE WITHOUT NOTICE. THE PRODUCTS DESCRIBED HEREIN AND THIS DOCUMENT ARE SUBJECT TO SPECIFIC DISCLAIMERS, SET FORTH AT www.vishay.com/doc?91000

Disclaimer

ALL PRODUCT, PRODUCT SPECIFICATIONS AND DATA ARE SUBJECT TO CHANGE WITHOUT NOTICE TO IMPROVE RELIABILITY, FUNCTION OR DESIGN OR OTHERWISE.

Vishay Intertechnology, Inc., its affiliates, agents, and employees, and all persons acting on its or their behalf (collectively, “Vishay”), disclaim any and all liability for any errors, inaccuracies or incompleteness contained in any datasheet or in any other disclosure relating to any product.

Vishay makes no warranty, representation or guarantee regarding the suitability of the products for any particular purpose or the continuing production of any product. To the maximum extent permitted by applicable law, Vishay disclaims (i) any and all liability arising out of the application or use of any product, (ii) any and all liability, including without limitation special, consequential or incidental damages, and (iii) any and all implied warranties, including warranties of fitness for particular purpose, non-infringement and merchantability.

Statements regarding the suitability of products for certain types of applications are based on Vishay's knowledge of typical requirements that are often placed on Vishay products in generic applications. Such statements are not binding statements about the suitability of products for a particular application. It is the customer's responsibility to validate that a particular product with the properties described in the product specification is suitable for use in a particular application. Parameters provided in datasheets and / or specifications may vary in different applications and performance may vary over time. All operating parameters, including typical parameters, must be validated for each customer application by the customer's technical experts. Product specifications do not expand or otherwise modify Vishay's terms and conditions of purchase, including but not limited to the warranty expressed therein.

Hyperlinks included in this datasheet may direct users to third-party websites. These links are provided as a convenience and for informational purposes only. Inclusion of these hyperlinks does not constitute an endorsement or an approval by Vishay of any of the products, services or opinions of the corporation, organization or individual associated with the third-party website. Vishay disclaims any and all liability and bears no responsibility for the accuracy, legality or content of the third-party website or for that of subsequent links.

Vishay products are not designed for use in life-saving or life-sustaining applications or any application in which the failure of the Vishay product could result in personal injury or death unless specifically qualified in writing by Vishay. Customers using or selling Vishay products not expressly indicated for use in such applications do so at their own risk. Please contact authorized Vishay personnel to obtain written terms and conditions regarding products designed for such applications.

No license, express or implied, by estoppel or otherwise, to any intellectual property rights is granted by this document or by any conduct of Vishay. Product names and markings noted herein may be trademarks of their respective owners.

© 2026 VISHAY INTERTECHNOLOGY, INC. ALL RIGHTS RESERVED

THIS DOCUMENT IS SUBJECT TO CHANGE WITHOUT NOTICE. THE PRODUCTS DESCRIBED HEREIN AND THIS DOCUMENT ARE SUBJECT TO SPECIFIC DISCLAIMERS, SET FORTH AT www.vishay.com/doc?91000