Reference Design
Active Discharge Circuit for 800 V Systems
Based on AC05AT, AC10AT, CMB0207, or LTO150 Resistors

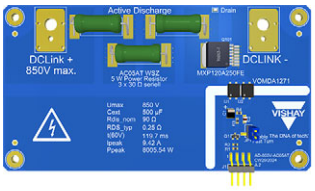

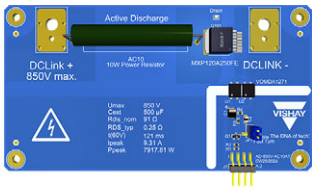

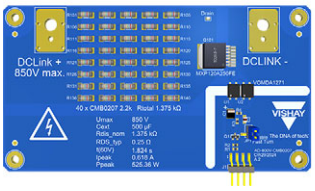

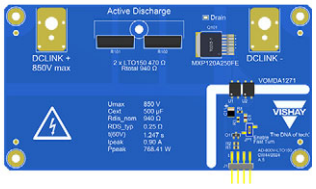

FEATURES

- High pulse load surface-mounted wirewound resistors, carbon film MELF resistors, and thick film technology resistors
- Low part count isolated gate drive circuit without the need for an external power supply

KEY COMPONENTS

- AC05AT wirewound resistor
- LTO 150 power resistor, thick film technology
- CMB0207 high pulse load carbon film MELF resistors
- MXP120A250FE MOSFET
- VOMDA1271 photovoltaic gate driver

LINKS TO ADDITIONAL RESOURCES

- Active Discharge of 800 V DC-Link

DESCRIPTION

Active discharge is a known method to discharge the stored energy in a capacitor (or any other energy storing element) in a controlled manner in which the system voltage can reach a safe value within a certain amount of time. In automotives, this time duration is defined by the car manufacturer according to legal requirements. For example, in automotive applications, the safe voltage is defined as 60 V, and the DC bus voltage has to reach this value in less than 5 s after the crash. This is defined by United Nations regulation No. 94 of the Economic Commission for Europe of the United Nations. Some other OEMs prefer more restrictive discharge timing. Therefore, in this application we choose to set the discharging time at less than 2 s.

This reference design follows the design steps required to discharge a DC-Link bus voltage of 850 V to 60 V in less than 2 s for a capacitor of 500 µF. It is also required that the circuitry repeats the discharge process three times within 15 s. Customers may follow the same steps to apply this design procedure to any other specific requirements.

Different resistor technologies within different design variants (four variants in total) are explored to give the customer a wide range of choices that match different kinds of applications.

For technical questions, contact: ww1resistors@vishay.com

THIS DOCUMENT IS SUBJECT TO CHANGE WITHOUT NOTICE. THE PRODUCTS DESCRIBED HEREIN AND THIS DOCUMENT ARE SUBJECT TO SPECIFIC DISCLAIMERS, SET FORTH AT www.vishay.com/doc?91000

1. SYSTEM BLOCK DIAGRAM

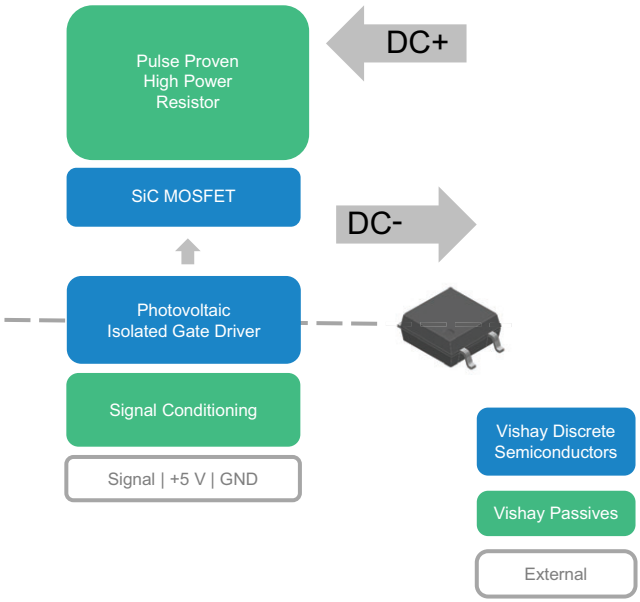

Fig. 1 - System Block Diagram

2. SYSTEM DESCRIPTION

The active discharge circuit comprises of a few main components that work together to perform the required function: the gate driver, MOSFET, and discharge (bleeding) resistance. Sizing and selection of each one of these components are explained in the following subsections.

2.1. Gate Driver

The gate driver has to provide the required isolation between the control and power sections, and the required voltage and pulse current to turn the MOSFET to the saturation region. In this design an automotive-qualified MOSFET driver (VOMDA1271) from Vishay is selected. The big advantage of the VOMDA1271 is its ability to obtain all the required energy to drive its internal circuitry from the infrared emitter on the low voltage, primary side of the isolation barrier. No power supply is needed to provide V_{CC}. The VOMDA1271 features a turn-off circuit to achieve a fast turn-off of the MOSFET.

TABLE 1 - VOMDA1271 ELECTRICAL CHARACTERISTICS (T_{amb} = 25 °C, unless otherwise specified)

PARAMETER	TEST CONDITION	SYMBOL	MIN.	TYP.	MAX.	UNIT
LED forward voltage	I_F = 10 mA	V_F	1.3	1.4	1.5	V
Open circuit voltage	I_F = 5 mA	V_{OC}	-	8.2	-	V
	I_F = 10 mA	V_{OC}	6.5	8.5	-	V
	I_F = 20 mA	V_{OC}	-	8.8	-	V

From Table 1, in order to get a 17 V open circuit voltage (V_{OC}) to drive the SiC MOSFET, a 10 mA forward current (I_F) is needed. In this application the primary side power supply is selected to be 5 V and two VOMDA1271 devices are connected in series to get the required gate to source voltage of 17 V.

In the forward operation of the primary side at 10 mA (I_F), the LED forward voltage may reach a typical value of 1.4 V at T_{amb} = 25 °C. To calculate the required resistance (R_3) to achieve the required forward current, and neglecting the $R_{DS(on)}$ of the small signal MOSFET, the following equation will apply.

$$R_3 = \frac{V_S - V_F}{I_F} = \frac{5\ V - 22.8\ B}{10\ mA} \sim 220\ \Omega$$

For more details, the user may refer to the gate driver datasheet and / or application note listed under [3].

For technical questions, contact: ww1resistors@vishay.com
THIS DOCUMENT IS SUBJECT TO CHANGE WITHOUT NOTICE. THE PRODUCTS DESCRIBED HEREIN AND THIS DOCUMENT ARE SUBJECT TO SPECIFIC DISCLAIMERS, SET FORTH AT www.vishay.com/doc?91000

2.2. SiC MOSFET

A 1200 V SiC MOSFET (MXP120A250FE) is selected to control the discharging time in this application. By turning on this MOSFET in saturation mode, the DC-Link capacitor energy will be dissipated in the discharge resistance. This MOSFET should be able to withstand the amount of current passing through during the discharging time. It is also important that the MOSFET be able to dissipate the internal energy without crossing the maximum junction temperature.

For more details, customers may refer to the MOSFET datasheet shown in [4].

2.3. Discharge Resistance

Different variants of the discharge resistance are presented in this reference design.

- Vishay power wirewound resistors (variant 1 and variant 2) are rated for short term power and voltage levels (5 s or less), and can actually withstand much higher levels for brief periods of time (less than the cross-over point)[1]. In this application, two wirewound resistors (AC05AT and AC10AT) are chosen to be the discharge resistance in this application, with a value of 30 Ω x 3 for the AC05AT and 91 Ω for the AC10AT
- Vishay carbon film MELF resistors (variant 3) benefit from an advanced pulse load capability. In this application, 40 CMB0207 resistors are chosen with a value of 2.2 kΩ
- Vishay power resistors, thick film technology (variant 4), benefit from being a direct-mounted ceramic on the heatsink. In this application, the LTO150 is chosen with a value of 470 Ω x 2

The known equation for the voltage across a resistor in an RC circuit is;

$$v(t) = v_0 e^{-\left(\frac{t}{RC}\right)} \quad (1)$$

Where:

- v(t) is the voltage across the capacitor at time t
- v_0 is the initial voltage across the capacitor
- R is the resistance of the discharge resistor
- C is the capacitance of the DC-Link capacitor

This equation can be rearranged to get the required resistance to discharge the capacitor within a certain duration.

In this application, different resistance types and values are presented to cover a wide range of applications.

Considering the system parameters in Table 2 and the chosen resistor values shown in Table 3, Fig. 2 shows different discharging times for all variants, confirming that all resistors are getting below 60 V in less than 2 s.

TABLE 2 - SYSTEM PARAMETERS

PARAMETER	VALUE
C	500 µF
V	850 V
Discharge to 60 V in	< 2 s
Ambient temperature	25 °C and 80 °C

For technical questions, contact: ww1resistors@vishay.com
THIS DOCUMENT IS SUBJECT TO CHANGE WITHOUT NOTICE. THE PRODUCTS DESCRIBED HEREIN AND THIS DOCUMENT ARE SUBJECT TO SPECIFIC DISCLAIMERS, SET FORTH AT www.vishay.com/doc?91000

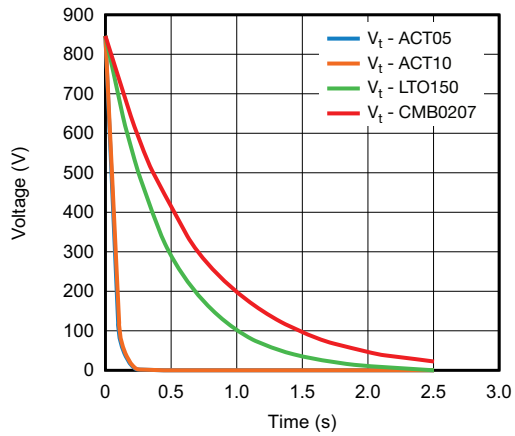

Fig. 2 - Different Discharging Times

2.4. Thermal Capacity Evaluation

While dissipating the energy through the discharge resistance, it is important that the temperature of the discharge resistance stays within the permissible limit. Also, as the power MOSFET is in series with the discharge resistance, it is important to validate the temperature rise of the power MOSFET and make sure it is within the accepted limit.

Temperature rise can be evaluated using a simplified thermal model explained in [2], which uses the internal thermal resistance of the component, which is normally given within the datasheet.

$$T_{resistance} = T_{amb} + dT \tag{2}$$

Where:

- $T_{resistance}$ is the rising temperature
- T_{amb} is the ambient temperature
- dT is the temperature rise due to the energy dissipation. This can be calculated by applying P_{loss} x R_{th}, or from the graphs provided in the datasheet
- P_{loss} is the power loss within the component
- R_{th} is the internal resistance of the component

The first step is to find the amount of energy needed to be dissipated in the resistor:

- Energy (450 V) = 0.5 x C x V^2 = 0.5 x 500e^{-6} x $(850)^2$ = 180.625 Ws(J)
- Energy (60 V) = 0.5 x C x V^2 = 0.5 x 500e^{-6} x $(60)^2$ = 0.9 Ws(J)
- Energy pulse = energy (850 V) - energy (60 V) = 180.625 - 0.9 ~ 180 Ws(J)

The following steps are to be followed in order to confirm that the resistance will be able to discharge the energy without reaching the cross-over point. The cross-over point is the time in which significant energy starts to be dissipated not only in the resistance wire itself, but also into the core, leads, and encapsulation material.

<u>Recommended Steps</u>

[1] Get the number of resistors (NR) and dT for energy input of 1 pulse in $\tau/2$

[2] Calculate dT for energy input of 2 pulses in 10 s in one resistor

[3] Add both dTs and add T_{amb} and check if T < 400 °C is ok

For technical questions, contact: ww1resistors@vishay.com
THIS DOCUMENT IS SUBJECT TO CHANGE WITHOUT NOTICE. THE PRODUCTS DESCRIBED HEREIN AND THIS DOCUMENT ARE SUBJECT TO SPECIFIC DISCLAIMERS, SET FORTH AT www.vishay.com/doc?91000

It is highly recommended to perform these steps with Vishay's technical support team. Customers may contact the technical support team at ww1resistors@vishay.com.

It is always recommended to perform the previous steps at the worst case ambient temperature, which is 80 °C in this reference design.

TABLE 3 - SUMMARY OF RESISTANCE TYPES AND RESISTANCE COUNTS				
RESISTANCE TYPE	**PART NUMBER**	**R (Ω)**	**P_R (W)**	**N_R**
AC05AT	AC05AT0K03009JBW00	30	5	3
AC10AT	AC10AT0009109JAB00	91	10	1
LTO150	LTO150F470R0JTE3	470	150	2
CMB0207	CMB02070X2201GB200	2200	1	40

2.5. Testing Procedure

The following steps need to be followed strictly to test each one of the proposed reference designs:

1. Connect DCLINK+ to the positive terminal of a DC-Link capacitor and DCLINK- to the negative terminal of a DC-Link capacitor. The user must take all precautions and make these connections in a safe sequence. The capacitor must be discharged before making this connection
2. Make sure that the #2 "Discharge" pin is connected to the 0 V pin in J1
3. Charge the capacitor carefully using an external supply to the required voltage (please revisit the absolute maximum ratings)
4. To enable the discharge, pull pin #2 "Discharge" on J1 to high

Individual discharge curves can be found in Fig. 7.

TYPICAL APPLICATION CIRCUIT

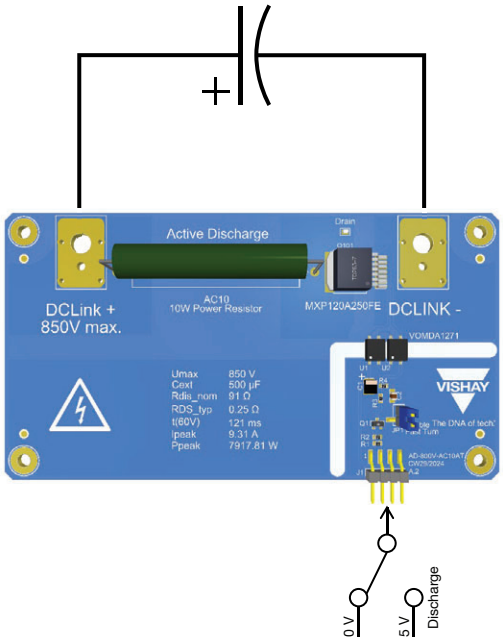

Fig. 3 - Typical Application Circuit Using a Two-Way Switch

THIS DOCUMENT IS SUBJECT TO CHANGE WITHOUT NOTICE. THE PRODUCTS DESCRIBED HEREIN AND THIS DOCUMENT ARE SUBJECT TO SPECIFIC DISCLAIMERS, SET FORTH AT www.vishay.com/doc?91000

PIN CONFIGURATION

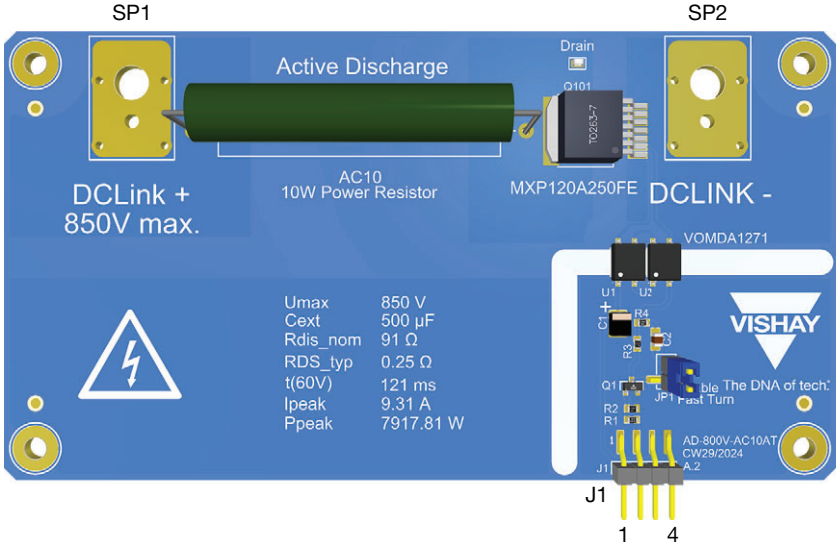

Fig. 4

PIN DESCRIPTION		
PIN NUMBER	**SYMBOL**	**DESCRIPTION**
SP1	DCLINK+	Connect with HV DC voltage input; max. 850 V
SP2	DCLINK-	Connect with reference point for DC Input
J1 / 1	N.C	Not connected
J1 / 2	Discharge	Active high discharge signal
J1 / 3	VCC	Connect with supply voltage +5 V
J1 / 4	GND	GND for supply voltage

ELECTRICAL CHARACTERISTICS

RECOMMENDED OPERATING RANGE			
PARAMETER	**MIN.**	**MAX.**	**UNIT**
DCLINK+ to DCLINK-	25	850	V
V_{CC} to GND	4.5	5.5	V

ABSOLUTE MAXIMUM RATINGS (T_{amb} = 25 °C, unless otherwise specified)		
ELECTRICAL PARAMETER	**LIMITS**	**UNIT**
HV U_{DC} to ref.	850	V
V_{CC} to GND	-0.3 to +6.0	V
Ambient temperature	-40 to 125	°C
Storage temperature	-40 to 150	°C
Max. power consumption	1500	mW
Max. current consumption	300	mA
Isolation voltage	5000	V_{RMS}

For technical questions, contact: ww1resistors@vishay.com
THIS DOCUMENT IS SUBJECT TO CHANGE WITHOUT NOTICE. THE PRODUCTS DESCRIBED HEREIN AND THIS DOCUMENT ARE SUBJECT TO SPECIFIC DISCLAIMERS, SET FORTH AT www.vishay.com/doc?91000

DERATING

The resistor's power dissipation causes it to heat up. To prevent overheating, the maximum allowable power output decreases at temperatures above the derating temperature, as shown in the derating curves. This heat can also affect nearby components, so adequate spacing is necessary. Fig. 5 and Fig. 6 show different derating curves for different resistor types.

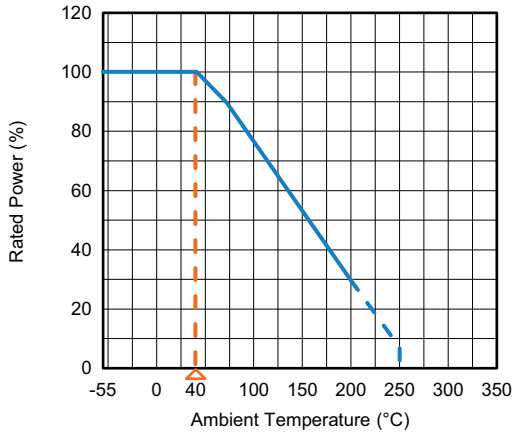

Fig. 5 - Derating Curves for ACT Resistors

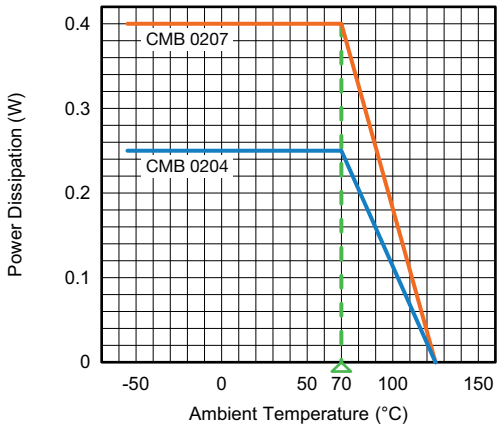

Fig. 6 - Derating Curves for CMB Resistors

For technical questions, contact: ww1resistors@vishay.com
THIS DOCUMENT IS SUBJECT TO CHANGE WITHOUT NOTICE. THE PRODUCTS DESCRIBED HEREIN AND THIS DOCUMENT ARE SUBJECT TO SPECIFIC DISCLAIMERS, SET FORTH AT www.vishay.com/doc?91000

ELECTRICAL CHARACTERISTICS

AD-800V-AC05AT

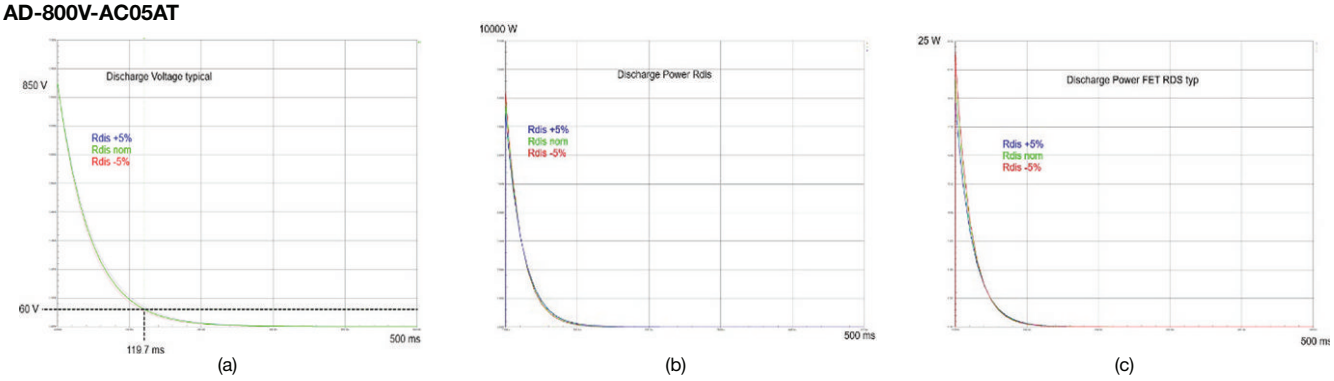

AD-800V-AC10AT

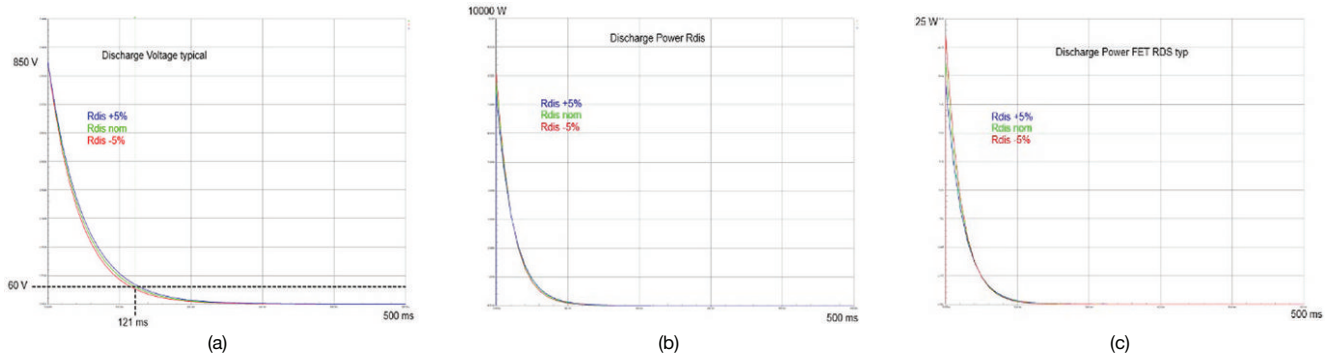

AD-800V-CMB0207

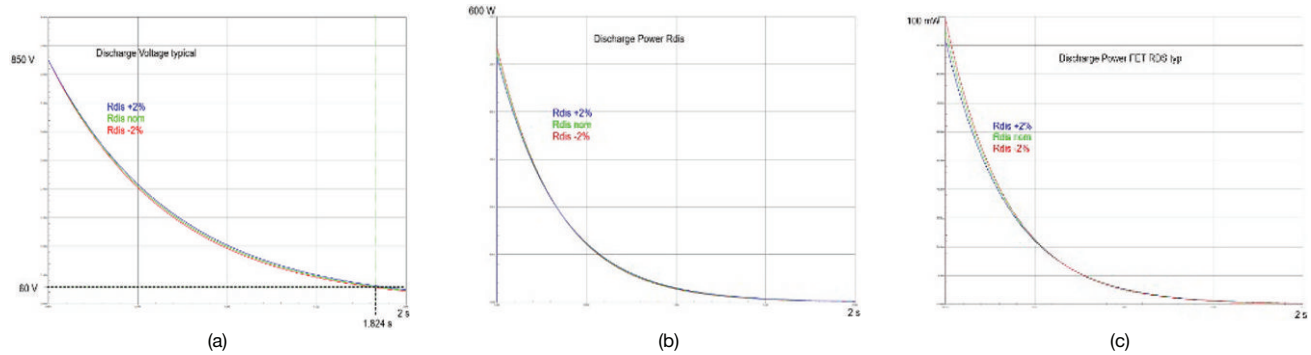

AD-800V-LTO150

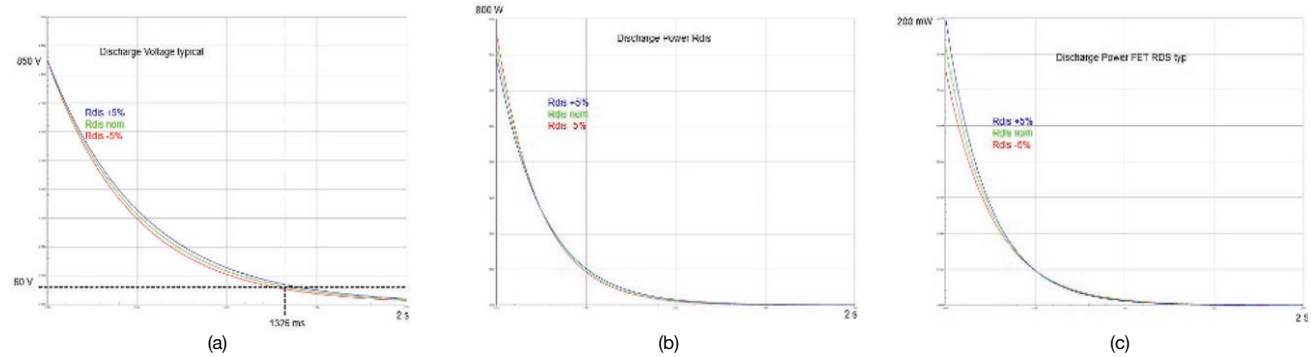

Fig. 7 - Discharge Curves for Individual Designs

For technical questions, contact: ww1resistors@vishay.com
THIS DOCUMENT IS SUBJECT TO CHANGE WITHOUT NOTICE. THE PRODUCTS DESCRIBED HEREIN AND THIS DOCUMENT ARE SUBJECT TO SPECIFIC DISCLAIMERS, SET FORTH AT www.vishay.com/doc?91000

DIMENSIONS

AD-800V-AC05AT

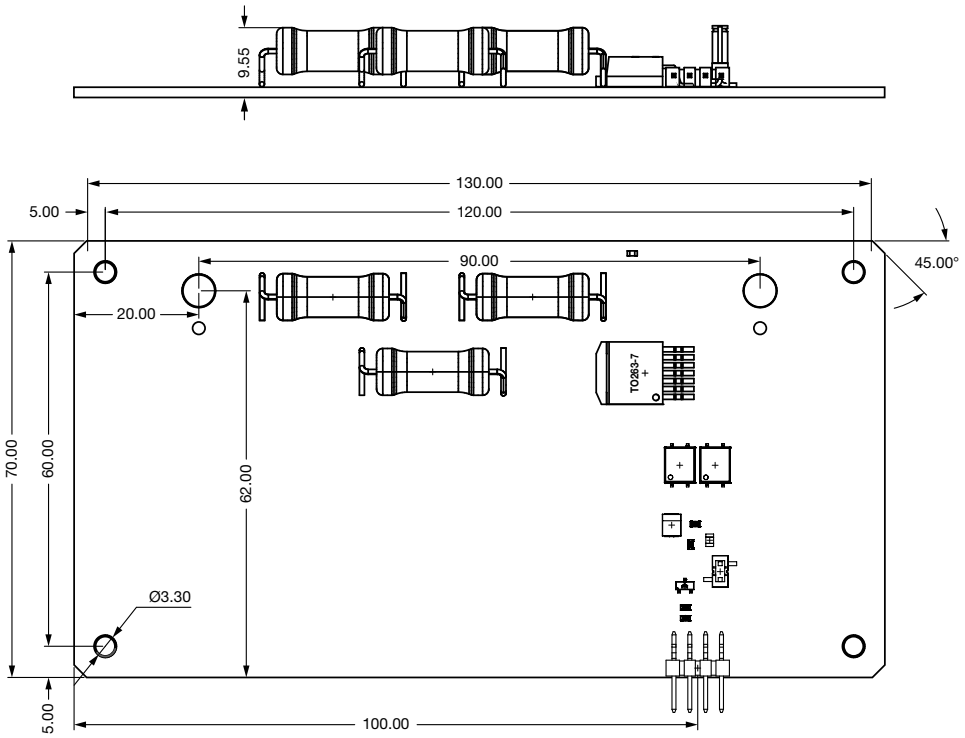

AD-800V-AC10AT

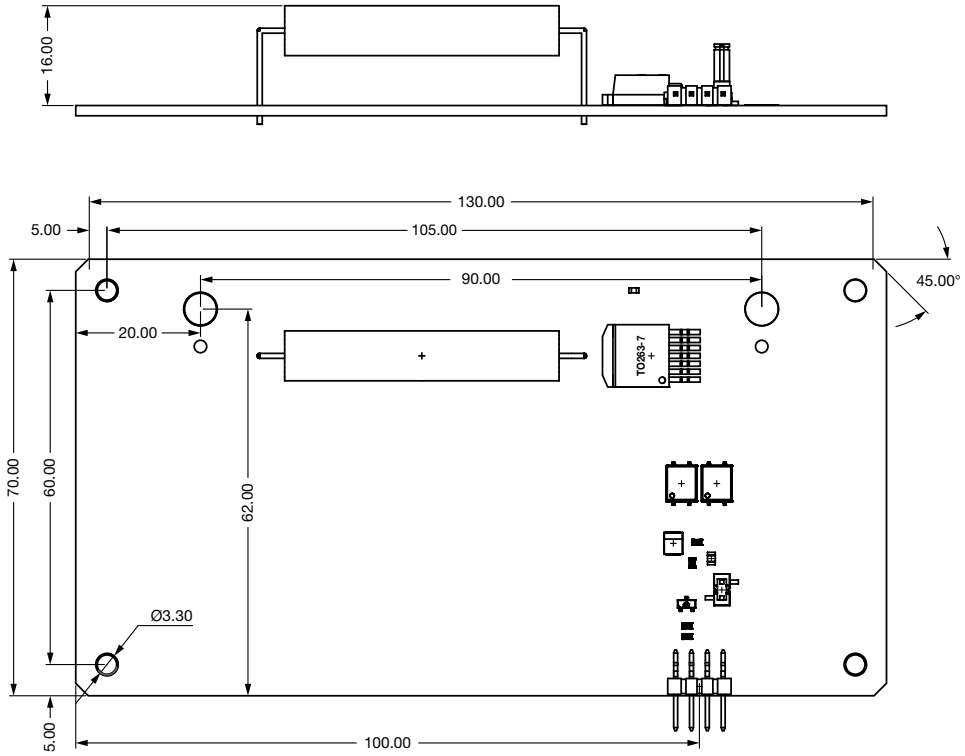

Note

- Heatsink is not provided, the customer may decide to use one if the application requires it

For technical questions, contact: ww1resistors@vishay.com
THIS DOCUMENT IS SUBJECT TO CHANGE WITHOUT NOTICE. THE PRODUCTS DESCRIBED HEREIN AND THIS DOCUMENT ARE SUBJECT TO SPECIFIC DISCLAIMERS, SET FORTH AT www.vishay.com/doc?91000

AD-800V-CMB0207

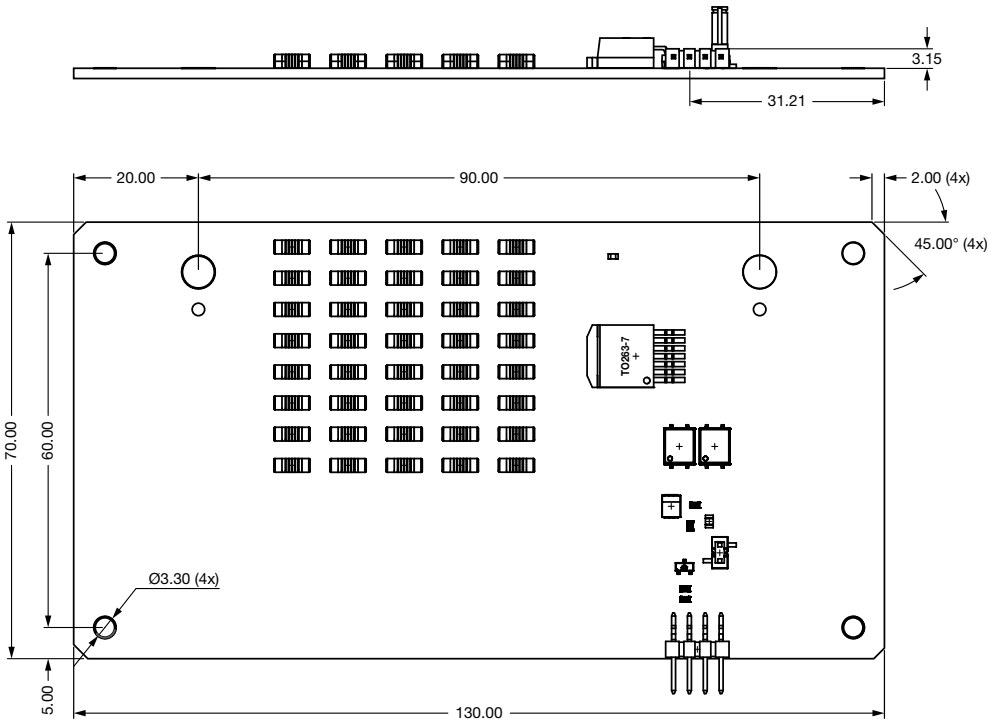

AD-800V-LTO150

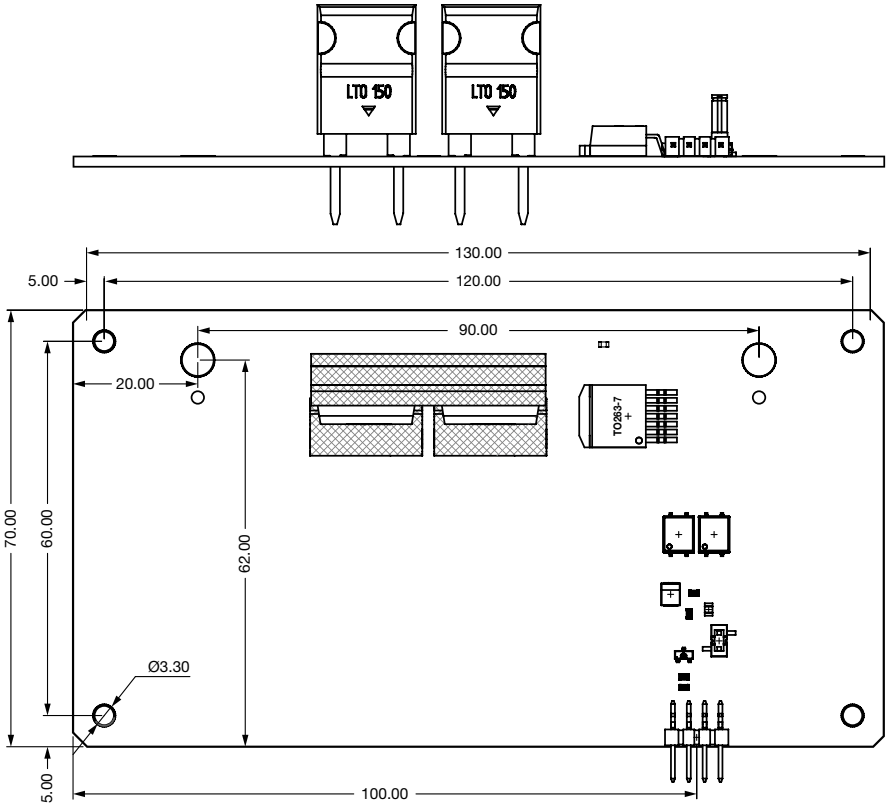

Note

- Heatsink is not provided, the customer may decide to use one if the application requires it

For technical questions, contact: ww1resistors@vishay.com
THIS DOCUMENT IS SUBJECT TO CHANGE WITHOUT NOTICE. THE PRODUCTS DESCRIBED HEREIN AND THIS DOCUMENT ARE SUBJECT TO SPECIFIC DISCLAIMERS, SET FORTH AT www.vishay.com/doc?91000

AVAILABLE REFERENCE DESIGN KITs

REFERENCE DESIGN	DESCRIPTION
AD-800V-AC05AT	Active discharge reference design works at 850 V using AC05AT wirewound resistor
AD-800V-AC10AT	Active discharge reference design works at 850 V using AC10AT wirewound resistor
AD-800V-CMB0207	Active discharge reference design works at 850 V using CMB0207carbon film MELF resistors
AD-800V-LTO150	Active discharge reference design works at 850 V using LTO150 Thick Film Technology resistors

BOM

A detailed BOM for each design is provided in the application folder in this link.

ADDITIONAL RESOURCES

[1] Pulse Handling Capabilities of Vishay Dale Wirewound Resistors
[2] Thermal Management in Surface-Mounted Resistor Applications
[3] VOMDA1271 Application Note (EV06)
[4] SiHH240N60E Datasheet

THIS DOCUMENT IS SUBJECT TO CHANGE WITHOUT NOTICE. THE PRODUCTS DESCRIBED HEREIN AND THIS DOCUMENT ARE SUBJECT TO SPECIFIC DISCLAIMERS, SET FORTH AT www.vishay.com/doc?91000

Disclaimer

1. Vishay Intertechnology, Inc. and its affiliates ("**Vishay**") provides the reference design to which this disclaimer is attached (the "**reference design**"), and may provide certain products, parts and components to implement the reference design (each, an "**evaluation kit**"), solely to assist customers and potential customers (each, a "**user**") who, in a research and development setting, are developing products and applications that incorporate Vishay products. This disclaimer supplements the terms of and conditions under which the user gains access to the reference design and / or evaluation kit (the "**terms and conditions**"). If and to the extent this disclaimer conflicts with the terms and conditions, this disclaimer will control.
2. Vishay and their respective directors, officers, agents, and employees (collectively, the "**Vishay parties**"), disclaim any and all warranties concerning the reference design or evaluation kits, and all liability for any errors, inaccuracies, incompleteness or other defects in the reference design or evaluation kits. Without limiting the foregoing:
   - 2.1. Users are responsible for (a) using their independent analysis, evaluation and judgment to validate the operating parameters, including typical parameters, for each component specified by the reference design or included in an evaluation kit, (b) assuring the safety of the products they develop and the compliance of those products with all applicable regulations, laws and other applicable requirements, and (c) obtaining any licenses to third party intellectual property rights that may be necessary for their products.
   - 2.2. Vishay makes no warranty, representation, or guarantee regarding the suitability of the reference design or evaluation kits for any particular purpose. To the maximum extent permitted by applicable law, Vishay disclaims (i) any and all liability arising out of the application or use of any design or product, (ii) any and all liability, including without limitation special, consequential, or incidental damages, and (iii) any and all implied warranties, including warranties of fitness for particular purpose, non-infringement, and merchantability. The aggregate liability of all Vishay parties will not exceed the amount the Vishay parties received in exchange for the reference design or evaluation kit giving rise to the claim.
   - 2.3. Users acknowledge that (i) the reference design was created under laboratory conditions, and no Vishay party has conducted any testing other than as may be specifically described in the reference design, (ii) any information in the reference design related to third party components described by a reference design or included in an evaluation kit ("**third party products**") does not constitute a license to use any third party product, or a warranty or endorsement of any third party product, and use of any such information, products or services may require a license from a third party under patents or other intellectual property rights and (iii) Vishay may make corrections, enhancements, improvements and other changes to their respective products and services, reference design, or evaluation kit, and to discontinue any product or service. Vishay has no obligations and makes no claims, representations, warranties, or guarantees regarding third party products included in a reference design or evaluation kit.
   - 2.4. Statements regarding the suitability of the reference design, evaluation kit, or other Vishay product for certain types of applications are based on Vishay's knowledge of typical requirements often placed on Vishay products in generic applications. Such statements are not binding statements about the suitability of the reference design, evaluation kit, or other Vishay product for a particular application. It is the customer's responsibility to validate that a particular reference design, evaluation kit, or other Vishay product with the properties described in the reference design or included in the evaluation kit is suitable for a particular application.
   - 2.5. The reference design is not fault-tolerant and is not intended for high risk applications, including without limitation in the operation of nuclear facilities, aircraft navigation or control systems, air traffic control, life support machines, weapons systems, or any other application in which the failure of the reference design could lead to death, personal injury, or severe physical or environmental damages. Any use of the reference design in connection with high risk applications or any other applications is fully at the user's own risk. Neither the evaluation kits nor their components are intended for commercial products or in consumer or household environments.
3. No license, express or implied, by estoppel or otherwise, to any intellectual property rights is granted by this document or by any conduct of Vishay. Product names and markings noted herein may be trademarks of their respective owners.
4. This disclaimer will be governed by the laws of the Commonwealth of Pennsylvania without reference to conflict of laws principles. User and the Vishay parties agree that the sole and exclusive jurisdiction for any dispute regarding the reference design or evaluation kits will be the state and federal courts sitting in Philadelphia, Pennsylvania.

THIS DOCUMENT IS SUBJECT TO CHANGE WITHOUT NOTICE. THE PRODUCTS DESCRIBED HEREIN AND THIS DOCUMENT ARE SUBJECT TO SPECIFIC DISCLAIMERS, SET FORTH AT www.vishay.com/doc?91000

Disclaimer

ALL PRODUCT, PRODUCT SPECIFICATIONS AND DATA ARE SUBJECT TO CHANGE WITHOUT NOTICE TO IMPROVE RELIABILITY, FUNCTION OR DESIGN OR OTHERWISE.

Vishay Intertechnology, Inc., its affiliates, agents, and employees, and all persons acting on its or their behalf (collectively, “Vishay”), disclaim any and all liability for any errors, inaccuracies or incompleteness contained in any datasheet or in any other disclosure relating to any product.

Vishay makes no warranty, representation or guarantee regarding the suitability of the products for any particular purpose or the continuing production of any product. To the maximum extent permitted by applicable law, Vishay disclaims (i) any and all liability arising out of the application or use of any product, (ii) any and all liability, including without limitation special, consequential or incidental damages, and (iii) any and all implied warranties, including warranties of fitness for particular purpose, non-infringement and merchantability.

Statements regarding the suitability of products for certain types of applications are based on Vishay's knowledge of typical requirements that are often placed on Vishay products in generic applications. Such statements are not binding statements about the suitability of products for a particular application. It is the customer's responsibility to validate that a particular product with the properties described in the product specification is suitable for use in a particular application. Parameters provided in datasheets and / or specifications may vary in different applications and performance may vary over time. All operating parameters, including typical parameters, must be validated for each customer application by the customer's technical experts. Product specifications do not expand or otherwise modify Vishay's terms and conditions of purchase, including but not limited to the warranty expressed therein.

Hyperlinks included in this datasheet may direct users to third-party websites. These links are provided as a convenience and for informational purposes only. Inclusion of these hyperlinks does not constitute an endorsement or an approval by Vishay of any of the products, services or opinions of the corporation, organization or individual associated with the third-party website. Vishay disclaims any and all liability and bears no responsibility for the accuracy, legality or content of the third-party website or for that of subsequent links.

Vishay products are not designed for use in life-saving or life-sustaining applications or any application in which the failure of the Vishay product could result in personal injury or death unless specifically qualified in writing by Vishay. Customers using or selling Vishay products not expressly indicated for use in such applications do so at their own risk. Please contact authorized Vishay personnel to obtain written terms and conditions regarding products designed for such applications.

No license, express or implied, by estoppel or otherwise, to any intellectual property rights is granted by this document or by any conduct of Vishay. Product names and markings noted herein may be trademarks of their respective owners.

© 2026 VISHAY INTERTECHNOLOGY, INC. ALL RIGHTS RESERVED

THIS DOCUMENT IS SUBJECT TO CHANGE WITHOUT NOTICE. THE PRODUCTS DESCRIBED HEREIN AND THIS DOCUMENT ARE SUBJECT TO SPECIFIC DISCLAIMERS, SET FORTH AT www.vishay.com/doc?91000